Gallatin Municipal-Regional Planning Commission
Work Session Agenda

Monday, June 9, 2014
Dr. J. Deotha Malone Council Chambers; 5 p.m.
Gallatin City Hall, 132 West Main Street

1. Discuss proposed Final Master Development Plan and Preliminary Plat for three (3) lots and right-of-way for Hunter Pointe, Phase 1located on Long Hollow Pike and SR 386 (PC0280-14 and PC0281-14).

2. Discuss revised architectural elevations for the ABC Technologies Expansion project located at 400 ABC Blvd. (PC0164-13).

3. Discuss proposed Site Plan for construction of a new cell tower on GAP Blvd. (PC0297-14).

4. Discuss possible amendments to G.Z.O., Section 15.03.080, *Surety Required.*

5. Discuss proposed Unified Land Development Code.

6. Other Business

ITEM 1 05-149 9432

RAGAN•SMITH

Land Planners • Civil Engineers
Landscape Architects • Surveyors

May 29, 2014

VIA EMAIL: Nick.Tuttle@gallatin-tn.gov

Mr. Nick Tuttle
City Engineer
City of Gallatin Engineering Division
132 West Main Street
Gallatin, Tennessee 37066

RE: HUNTER POINTE
TRAFFIC IMPACT STUDY UPDATE
RESPONSE TO COMMENTS
CITY OF GALLATIN, SUMNER COUNTY, TENNESSEE

Dear Nick:

As discussed in our meeting held on May 28, 2014 with City of Gallatin staff, this letter is being provided to respond to the Hunter Pointe Traffic Impact Study comments. Additionally, we have included a summary of additional discussion/comments for your approval related to items to be provided to the City of Gallatin as part of resubmittals for Hunter Pointe.

Responses to comments in your May 12, 2014 letter are addressed as follows:

Comment 1. *The dedication of a public route (Wendling Boulevard) through the Hunter Pointe Development should be addressed by the TIS.*
Response: **Acknowledged and agreed.**

Comment 2. *The TDOT ROW agreement that has been signed and recorded should be referenced and/or described in the TIS.*
Response: **Acknowledged and agreed.**

Comment 3. *A general note should be added to the conclusions and recommendations area that should read something like this: "All improvements recommended by this Traffic Impact Study shall be the responsibility of the Hunter Pointe Development unless other noted."*
Response: **Acknowledged and agreed.**

Comment 4. *The median installation on SR-174 (Long Hollow Pike) is not recommended in this study in the area of Access "A". Must be added.*
Response: **Acknowledged and agreed.**

Comment 5. *The City of Gallatin has entered into an agreement with TDOT to extend GreenLea Boulevard to SR-174 in this area. This project includes an improvement on SR-174 of an added TWLTL up to the intersection of Buckingham Boulevard. This turn lane improvement is less than 500-feet from Access "C". The Hunter Pointe Development should simply continue the TWLTL from Access "C" to the Buckingham Boulevard intersection for consistency through this area.*
Response: **Access "C" is not proposed as part of the current plans and the off-site improvements for Hunter Pointe. However, we understand that the intent is for Long Hollow Pike to include a two-way left turn lane (TWLTL) from GreenLea Boulevard to SR-386 and agree that the portion near Access "C" will be completed as part of Access "C" when it is constructed. It is our understanding a portion of Long Hollow Pike is currently under R.O.W. acquisition for the GreenLea Boulevard extension project and should be constructed in the near future. Based on the time frame for construction of Access "C", we believe this will dictate the extension limits.**

Comment 6. *The acceleration tapers and lineage recommendations for Access "D" do not match the proposal for construction (and what we understand TDOT to be requiring).*

Response: **Acknowledged and agreed.**

Comment 7. *Understandably, there are no recommendations for improvements at the intersection of SR-174 and SR-386, but a more detailed presentation of the analysis of this intersection should be made. We would like to see levels-of-service on each respective movement through the intersection, and a horizon year forecast for the intersection. The ultimate goal of this analysis would be to predict what improvements may be required beyond this project. The City/State would want improvements that are made by this project to not interfere with improvements that will likely be necessary int eh future, if preventable.*

Response: **A meeting with City of Gallatin planning and engineering staff was held on Wednesday, May 28 and this item was discussed in relation to the scope of additional analysis in the traffic study. We will provide the following to satisfy the revision for Item #7.**

- **The traffic impact study will be updated to accompany the current PMDP and FMDP submittals. This updated study will reflect Items #1-#6 above and the anticipated impact of the GreenLea Boulevard extension. The analysis in the study will be updated for the horizon of full build-out of Hunter Pointe.**
- **A separate letter will be provided addressing feasibility issues at the intersection of Long Hollow Pike and SR-386. This letter will discuss the ability for future improvements to Long Hollow Pike within the existing right-of-way that would provide 1 WB lane, 2 EB left turn lanes, 1 EB through lane, and 1 EB right turn lane at the intersection with SR-386. Any proposed offsite improvements being completed with the proposed Hunter Pointe development will include the anticipation of these future projected movements. This letter will not address traffic forecasts or analysis for future horizon years or developments.**

Comment 8. *Update any other figures/tables that may be affected by the above comments or changes made to the Preliminary Master Development Plan.*

Response: **Acknowledged and agreed.**

Thank you for meeting with us to discuss these comments and set a path forward for this project. If you have any comments or if you need additional information, we would be happy to discuss those items with you at your convenience.

Sincerely,

RAGAN-SMITH ASSOCIATES, INC.

Brandon S Baxter

Brandon S. Baxter, P.E., PTOE
Transportation Engineer

BSB:djb

c: Mr. Kip Sowden - kip@rreaf.com
Mr. Robert Burnett -RobertB@rreaf.com
Mr. Doug McKnight - doug@rreaf.com
Mr. Charles Kimbrough - charleskimbrough@comcast.net
Mr. Bill Mccord - william.mccord@gallatin-tn.gov
Mr. Charlie Lowe

FINAL MASTER DEVELOPMENT PLANS

FOR

HUNTER POINTE

PHASE 1, ROADWAY AND LOTS 1-3

REALTY AMERICA GROUP, LP

CONTACTS

OWNER/DEVELOPER

REALTY AMERICA GROUP, LP.
KIP SOWDEN
4245 NORTH CENTRAL EXPRESSWAY
SUITE 420
DALLAS, TX 75206
(214) 522-3300
KIP@RREAF.COM

CIVIL

CALEB J. THORNE, PE
315 WOODLAND STREET
NASHVILLE, TN 37206
(615) 244-8591
CTHORNE@RAGANSMITH.COM

LANDSCAPE ARCHITECTURE

SCOTTY BERNICK, RLA
315 WOODLAND STREET
NASHVILLE, TN 37206
(615) 244-8591
SBERNICK@RAGANSMITH.COM

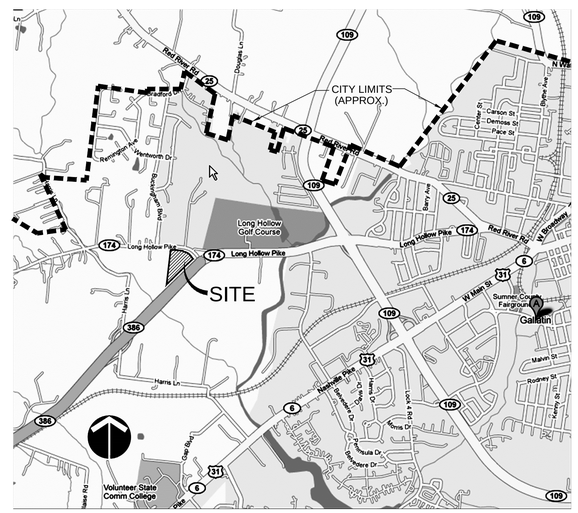

LOCATION MAP
NOT TO SCALE

INDEX OF SHEETS

SHEET	DESCRIPTION
C0.0	COVER SHEET
CIVIL PLANS	
C0.1	CIVIL NOTES
C0.2	EXISTING CONDITIONS
C1.0	OVERALL SITE LAYOUT PLAN
C1.1	ENLARGED SITE LAYOUT PLAN
C3.0	OVERALL GRADING AND DRAINAGE PLAN
C3.1	ENLARGED GRADING AND DRAINAGE PLAN
C3.2	ENLARGED GRADING AND DRAINAGE PLAN
C4.0	OVERALL UTILITY PLAN
C4.1	ENLARGED UTILITY PLAN
C5.1	CIVIL DETAILS
C5.2	CIVIL DETAILS
C5.3	CIVIL DETAILS
LANDSCAPE ARCHITECTURAL PLANS	
L1.1	LANDSCAPE PLAN, NOTES AND DETAILS

STATE ROUTE 386 AT LONG HOLLOW PIKE, CITY OF GALLATIN, SUMNER COUNTY, TENNESSEE

IF YOU DIG TENNESSEE...
CALL US FIRST!
811
TENNESSEE ONE CALL
IT'S THE LAW

RAGAN•SMITH
LAND PLANNERS • CIVIL ENGINEERS
LANDSCAPE ARCHITECTS • SURVEYORS
NASHVILLE
P.O. BOX 200070
315 WOODLAND STREET
NASHVILLE, TN. 37206
(615) 244-8591
CHATTANOOGA
1410 COMMERCE STREET
SUITE 200
CHATTANOOGA, TN. 37402
(423) 490-9400
• www.ragansmith.com •

CALEB J. THORNE
REGISTERED ENGINEER
AGRICULTURE
No. 111759
STATE OF TENNESSEE
5/8/14

HUNTER POINTE
PHASE 1, ROADWAY AND LOTS 1-3
REALTY AMERICA GROUP, LP
STATE ROUTE 386 AT LONG HOLLOW PIKE, CITY OF GALLATIN, SUMNER COUNTY, TENNESSEE

JOB NO. 05149	WK. ORDER 9432
DESIGNED:	C. THORNE
DRAWN:	B. SHRUM
SCALE:	NO SCALE
DATE:	APRIL 23, 2014

REVISIONS

COVER SHEET

C0.0

G:\05149-NATIO-CIVIL ENGINEERING_SHEETS\9432 SNAP (COVER).DWG
PLOTTED BY: BOBBY SHRUM ON: 5/8/2014 2:12 PM LAST UPDATED BY: JICS ON: 5/8/2014 12:50 PM

RSA STANDARD NOTES

SITE GENERAL NOTES

1. THE CONTRACTOR SHALL VERIFY THE LOCATION OF ALL EXISTING UTILITIES IN THE PROXIMITY OF THE CONSTRUCTION AREA AND REPORT ANY DISCREPANCIES TO THE OWNER'S REPRESENTATIVE PRIOR TO BEGINNING WORK.
2. THE CONTRACTOR SHALL CONFORM TO ALL LOCAL, STATE AND FEDERAL CODES AND OBTAIN ALL PERMITS PRIOR TO BEGINNING WORK.
3. THE CONTRACTOR SHALL CHECK ALL FINISHED GRADES AND DIMENSIONS AND REPORT ANY DISCREPANCIES TO THE OWNER'S REPRESENTATIVE PRIOR TO BEGINNING WORK.
4. DIMENSIONS ARE TO THE FACE OF CURB, EDGE OF CONCRETE AND FACE OF BUILDING UNLESS NOTED OTHERWISE.
5. PROPOSED BUILDING FOOTPRINT IS FOR GRAPHIC PURPOSES ONLY. CONTRACTOR SHALL USE THE CURRENT ARCHITECTURAL DRAWINGS FOR BUILDING STAKEOUT AND VERIFY THAT THERE ARE NO DISCREPANCIES WITH THESE PLANS.
6. ALL TRAFFIC MARKINGS SHALL CONFORM TO THE MANUAL OF UNIFORM TRAFFIC CONTROL DEVICE (MUTCD). ALL PAVEMENT MARKING SHALL BE THERMOPLASTIC UNLESS DIRECTED OTHERWISE BY THE OWNER'S REPRESENTATIVE.
7. ALL HANDICAP RAMPS, PARKING SPACES AND ACCESSIBLE ROUTES SHALL COMPLY WITH THE CURRENT ADA REQUIREMENTS.
8. EXTERIOR DOOR LANDINGS SHALL BE PROVIDED PER THE LOCAL BUILDING CODE. CONTRACTOR SHALL COORDINATE DOOR LOCATIONS AND ADJACENT SIDEWALK/LANDING GRADES WITH THESE PLANS AND REPORT ANY DISCREPANCIES TO THE OWNER'S REPRESENTATIVE.

SITE CONSTRUCTION NOTES

1. THE NECESSARY PERMITS FOR THE WORK SHOWN ON THESE SITE DEVELOPMENT PLANS WILL BE OBTAINED BY THE CONTRACTOR PRIOR TO COMMENCEMENT OF ANY WORK ON THIS PROJECT. THE CONTRACTOR SHALL GIVE ALL NECESSARY NOTICES AND OBTAIN ALL PERMITS AND PAY ALL FEES INVOLVED IN SECURING SAID PERMITS. HE SHALL ALSO COMPLY WITH ALL CITY, COUNTY AND STATE BUILDING LAWS, ORDINANCES OR REGULATIONS RELATING TO THE CONSTRUCTION OF THE PROJECT.
2. THE CONTRACTOR SHALL BE RESPONSIBLE FOR AND SHALL BEAR ALL EXPENSES OF FIELD STAKING NECESSARY FOR SITE AND BUILDING LAYOUT. ALL LAYOUT SHALL BE PERFORMED IN ACCORDANCE WITH THE SITE LAYOUT PLAN.
3. THE LOCATION OF EXISTING PIPING AND UNDERGROUND UTILITIES, SUCH AS WATER AND GAS LINES, ELECTRICAL AND TELEPHONE CONDUITS, ETC., AS SHOWN ON THIS PORTION OF THE PLANS HAVE BEEN DETERMINED FROM THE BEST AVAILABLE INFORMATION BY ACTUAL SURVEYS, OR TAKEN FROM THE RECORDS AND DRAWINGS OF THE EXISTING UTILITIES. HOWEVER, THE CIVIL ENGINEER DOES NOT ASSUME RESPONSIBILITY THAT, DURING CONSTRUCTION, THE POSSIBILITY OF UTILITIES OTHER THAN THOSE SHOWN MAY BE ENCOUNTERED OR THAT ACTUAL LOCATION OF THOSE SHOWN MAY VARY SOMEWHAT FROM THE LOCATION DESIGNATED ON THIS PORTION OF THE PLANS. IN AREAS WHERE IT IS NECESSARY THAT THE EXACT LOCATIONS OF UNDERGROUND LINES BE KNOWN, THE CONTRACTOR SHALL, AT THIS OWN EXPENSE, FURNISH ALL LABOR AND TOOLS TO EITHER VERIFY AND SUBSTANTIATE OR DEFINITIVELY ESTABLISH THE LOCATION OF THE LINES.
4. THE CONTRACTOR MUST UNDERSTAND THAT THE WORK IS ENTIRELY AT HIS RISK UNTIL SAME IS ACCEPTED AND HE WILL BE HELD RESPONSIBLE FOR ITS SAFETY BY THE OWNER. THEREFORE, THE CONTRACTOR SHALL FURNISH AND INSTALL ALL NECESSARY TEMPORARY WORKS FOR THE PROTECTION OF THE WORK, INCLUDING BARRICADES, WARNING SIGNS, AND LIGHTS.
5. THE SITE DEVELOPMENT PORTION OF THIS PROJECT WILL BE SUBJECT TO THE INSPECTION AND FINAL APPROVAL OF THE LOCAL PLANNING, CODES, WATER AND SEWER DEPARTMENTS (AND/OR UTILITY DISTRICTS), ENGINEERING/PUBLIC WORKS DEPARTMENTS AND FIRE MARSHAL'S OFFICE.
6. IF, DURING THE CONSTRUCTION OF THE SITE DEVELOPMENT PORTION OF THIS PROJECT, A QUESTION OF INTENT OR CLARITY ARISES FROM EITHER THE PLANS OR SPECIFICATIONS, THE CONTRACTOR WILL IMMEDIATELY BRING THE MATTER TO THE ATTENTION OF THE CIVIL ENGINEER OR OWNER'S REPRESENTATIVE FOR RESOLUTION BEFORE THE AFFECTED WORK ITEMS ARE INITIATED OR PURSUED FURTHER.
7. THE CONTRACTOR WILL EXERCISE EXTREME CAUTION IN THE USE OF EQUIPMENT IN AND AROUND OVERHEAD AND/OR UNDERGROUND POWER LINES. IF AT ANY TIME IN THE PURSUIT OF THIS WORK THE CONTRACTOR MUST WORK IN CLOSE PROXIMITY OF THE ABOVE-NOTED LINES, THE ELECTRIC AND/OR TELEPHONE COMPANIES SHALL BE CONTACTED PRIOR TO SUCH WORK AND THE PROPER SAFETY MEASURES TAKEN. THE CONTRACTOR SHOULD MAKE A THOROUGH EXAMINATION OF THE OVERHEAD LINES IN THE PROJECT AREA PRIOR TO THE INITIATION OF CONSTRUCTION.
8. THE CONTRACTOR SHALL BE RESPONSIBLE FOR ANY DAMAGE DONE TO THE PREMISES OR ADJACENT PREMISES, OR INJURIES TO THE PUBLIC DURING THE CONSTRUCTION OF THE WORK, CAUSED BY HIMSELF, HIS SUBCONTRACTORS, OR THE CARELESSNESS OF ANY OF HIS EMPLOYEES.

DEMOLITION NOTES

1. THE CONTRACTOR WILL BE REQUIRED TO REMOVE ALL EXCAVATED MATERIALS AND SUCH ITEMS SHALL BECOME THE PROPERTY OF THE CONTRACTOR. ALL ITEMS SHALL BE PROPERLY DISPOSED OF AT AN OFF-SITE LOCATION. THE CONTRACTOR SHALL OUTLINE ANY AND ALL POSSIBLE HAUL ROUTES AND SHALL BE PREPARED TO SUBMIT SUCH TO THE LOCAL JURISDICTION PUBLIC WORKS DEPARTMENT, THE CIVIL ENGINEER AND OTHER AUTHORITIES FOR APPROVAL.
2. IF, AT ANY TIME, PRIOR TO OR DURING THE DEMOLITION WORK, HAZARDOUS MATERIAL IS ENCOUNTERED, THE CONTRACTOR SHALL NOTIFY THE OWNER'S REPRESENTATIVE AND APPROPRIATE GOVERNMENTAL AGENCY.
3. THE CONTRACTOR SHALL NOTIFY ADJACENT OWNERS OF WORK THAT MAY AFFECT THEIR PROPERTY, POTENTIAL NOISE, UTILITY OUTAGE OR DISRUPTION. SUCH OPERATIONS SHALL BE CONDUCTED BY THE CONTRACTOR WITH MINIMUM INTERFERENCE TO ADJACENT OWNERS. ADJACENT EGRESS AND ACCESS SHALL BE PROPERLY MAINTAINED AT ALL TIMES. DO NOT CLOSE OR OBSTRUCT ANY ROADWAYS, PARKING OR SIDEWALKS WITHOUT PERMISSION FROM THE ADJACENT OWNERS OR THE LOCAL JURISDICTION PUBLIC WORKS DEPARTMENT.
4. PRIOR TO THE COMMENCEMENT OF DEMOLITION/GRADING OPERATIONS, ALL OVERHEAD AND UNDERGROUND UTILITIES SHALL BE LOCATED. ALL REMOVAL AND/OR RELOCATION OF UTILITIES SHALL BE COORDINATED WITH THE RESPECTIVE UTILITY COMPANIES.
5. THE CONTRACTOR WILL PROVIDE ALL NECESSARY PROTECTIVE MEASURES TO SAFEGUARD EXISTING UTILITIES FROM DAMAGE DURING CONSTRUCTION OF THIS PROJECT. IN THE EVENT THAT SPECIAL EQUIPMENT IS REQUIRED TO WORK OVER OR AROUND THE UTILITIES, THE CONTRACTOR WILL BE REQUIRED TO FURNISH SUCH EQUIPMENT AT NO ADDITIONAL COST TO OWNER.
6. THE CONTRACTOR WILL BE SOLELY RESPONSIBLE FOR CONTACTING ALL AFFECTED UTILITIES PRIOR TO SUBMITTING HIS BID TO DETERMINE THE EXTENT TO WHICH UTILITY DISCONNECTIONS AND/OR ADJUSTMENTS WILL HAVE UPON THE SCHEDULE OF THE WORK FOR THE PROJECT. SOME UTILITY FACILITIES MAY NEED TO BE ADJUSTED CONCURRENTLY WITH THE CONTRACTOR'S OPERATIONS, WHILE SOME WORK MAY BE REQUIRED 'AROUND' UTILITY FACILITIES THAT WILL REMAIN IN PLACE. IT IS UNDERSTOOD AND AGREED THAT THE CONTRACTOR WILL RECEIVE NO ADDITIONAL COMPENSATION FOR DELAYS OR INCONVENIENCE CAUSED BY THE UTILITY ADJUSTMENT.

EROSION PREVENTION AND SEDIMENT CONTROLS

DESIGN, INSPECTION, AND MAINTENANCE OF BMPS DESCRIBED AND SHOWN ON THESE PLANS SHALL BE CONSISTENT OR EXCEED RECOMMENDATIONS CONTAINED IN THE CURRENT EDITION OF TDEC'S TENNESSEE EROSION CONTROL HANDBOOK.

1. ALL CONTROL MEASURES MUST BE PROPERLY INSTALLED AND MAINTAINED IN ACCORDANCE WITH THE MANUFACTURER'S SPECIFICATIONS, TDEC AND LOCAL STANDARDS.
2. BMP CAPACITY [SEDIMENT TRAPS, SILT FENCES, SEDIMENTATION PONDS, AND OTHER SEDIMENT CONTROL] SHALL NOT BE REDUCED BY MORE THAN 50% AT ANY GIVEN TIME. IF PERIODIC INSPECTIONS OR OTHER INFORMATION INDICATES A CONTROL HAS BEEN USED INAPPROPRIATELY OR INCORRECTLY, THE CONTRACTOR MUST REPLACE OR MODIFY THE CONTROL FOR RELEVANT SITE SITUATIONS.
3. WHERE PERMANENT OR TEMPORARY VEGETATION COVER IS USED AS A CONTROL MEASURE, THE TIMING OF THE PLANTING IS CRITICAL. PLANNING FOR PLANTING OF VEGETATION COVER DURING WINTER OR DRY MONTHS SHOULD BE AVOIDED.
4. IF SEDIMENT ESCAPES THE PERMITTED AREA, OFF-SITE ACCUMULATIONS OF SEDIMENT THAT HAVE NOT REACHED A STREAM MUST BE REMOVED AT A FREQUENCY SUFFICIENT TO MINIMIZE OFFSITE IMPACTS. THE CONTRACTOR SHALL NOT INITIATE REMEDIATION/RESTORATION OF A STREAM WITHOUT CONSULTING THE DIVISION FIRST. THE NOI GENERAL PERMIT DOES NOT AUTHORIZE ACCESS TO PRIVATE PROPERTY. ARRANGEMENTS CONCERNING REMOVAL OF SEDIMENT ON ADJOINING PROPERTY MUST BE SETTLED BY THE CONTRACTOR AND ADJOINING LANDOWNER.
5. LITTER, CONSTRUCTION DEBRIS, AND CONSTRUCTION CHEMICALS EXPOSED TO STORM WATER SHALL BE PICKED UP PRIOR TO ANTICIPATED STORM EVENTS OR BEFORE BEING CARRIED OFF OF THE SITE BY WIND OR OTHERWISE PREVENTED FROM BECOMING A POLLUTANT SOURCE FOR STORM WATER DISCHARGES. AFTER USE, MATERIALS USED FOR EPSC SHOULD BE REMOVED OR OTHERWISE PREVENTED FROM BECOMING A POLLUTANT SOURCE FOR STORM WATER DISCHARGE.
6. ERODIBLE MATERIAL STORAGE AREAS (INCLUDING OVERBURDEN AND STOCKPILES OF SOIL) AND BORROW PITS ARE CONSIDERED PART OF THE SITE AND SHOULD BE ADDRESSED WITH APPROPRIATE BMP'S ACCORDINGLY.
7. PRE-CONSTRUCTION VEGETATIVE GROUND COVER SHALL NOT BE DESTROYED, REMOVED, OR DISTURBED MORE THAN 15 DAYS PRIOR TO GRADING OR EARTH MOVING UNLESS THE AREA IS STABILIZED. CONTRACTOR SHALL SEQUENCE EVENTS TO MINIMIZE THE EXPOSURE TIME OF GRADED OR DENUDED AREAS. CLEARING AND GRUBBING SHALL BE HELD TO THE MINIMUM NECESSARY FOR GRADING AND EQUIPMENT OPERATION. EXISTING VEGETATION AT THE SITE SHOULD BE PRESERVED TO THE MAXIMUM EXTENT PRACTICABLE.
8. EPSC MEASURES MUST BE IN PLACE AND FUNCTIONAL BEFORE MOVING OPERATIONS BEGIN AND MUST BE CONSTRUCTED AND MAINTAINED THROUGHOUT THE CONSTRUCTION PERIOD. TEMPORARY MEASURES MAY BE REMOVED AT THE BEGINNING OF THE WORKADAY, BUT MUST BE REPLACED AT THE END OF THE WORKDAY.
9. THE FOLLOWING RECORDS SHALL BE MAINTAINED ON OR NEAR SITE: THE DATES WHEN MAJOR GRADING ACTIVITIES OCCUR; THE DATES WHEN CONSTRUCTION ACTIVITIES TEMPORARILY OR PERMANENTLY CEASE OR A PORTION OF THE SITE; THE DATES WHEN STABILIZATION MEASURES ARE INITIATED; INSPECTION RECORDS AND RAINFALL RECORDS. CONTRACTOR SHALL MAINTAIN A RAIN GAUGE AND DAILY RAINFALL RECORDS AT THE SITE, OR USE A REFERENCE SITE FOR A RECORD OF DAILY AMOUNT OF PRECIPITATION.
10. A COPY OF THE SWPPP SHALL BE RETAINED ON-SITE AND SHOULD BE ACCESSIBLE TO THE DIRECTOR AND THE PUBLIC. ONCE SITE IS INACTIVE OR DOES NOT HAVE AN ONSITE LOCATION ADEQUATE TO STORE THE SWPPP, THE LOCATION OF THE SWPPP, ALONG WITH A CONTACT PHONE NUMBER, SHALL BE POSTED ON-SITE. IF THE SWPPP IS LOCATED OFF-SITE, REASONABLE LOCAL ACCESS TO THE PLAN, DURING NORMAL WORKING HOURS, MUST BE PROVIDED.
11. OFF-SITE VEHICLE TRACKING OF SEDIMENTS AND THE GENERATION OF DUST SHALL BE MINIMIZED. A STABILIZED CONSTRUCTION ACCESS (A POINT OF ENTRANCE/EXIT TO A CONSTRUCTION SITE) SHALL BE CONSTRUCTED AS NEEDED TO REDUCE THE TRACKING OF MUD AND DIRT ONTO PUBLIC ROADS BY CONSTRUCTION VEHICLES.
12. INSPECTIONS MUST BE PERFORMED AT LEAST TWICE EVERY CALENDAR WEEK. INSPECTIONS SHALL BE PERFORMED AT LEAST 72 HOURS APART. WHERE SITES OR PORTIONS OF CONSTRUCTION SITES HAVE BEEN TEMPORARILY STABILIZED, OR RUNOFF IS UNLIKELY DUE TO WINTER CONDITIONS OR DUE TO EXTREME DROUGHT, SUCH INSPECTION HAS TO BE CONDUCTED ONCE PER MONTH UNTIL THAWING OR PRECIPITATION RESULTS IN RUNOFF OR CONSTRUCTION ACTIVITIES RESUMES. INSPECTION REQUIREMENT DO NOT APPLY TO DEFINABLE AREAS THAT HAVE BEEN FINALLY STABILIZED, AS DESIGNED BY THE ENGINEER. WRITTEN NOTIFICATION OF THE INTENT TO CHANGE THE INSPECTION FREQUENCY AND THE JUSTIFICATION FOR SUCH REQUEST MUST BE SUBMITTED TO THE LOCAL ENVIRONMENTAL FIELD OFFICE, OR THE DIVISION'S NASHVILLE CENTRAL OFFICE FOR PROJECTS OF TDOT OR TVA. SHOULD THE DIVISION DISCOVER THAT MONTHLY INSPECTION OF THE DIVISION DISCOVER THAT MONTHLY INSPECTIONS OF THE SITE ARE NOT APPROPRIATE DUE TO INSUFFICIENT STABILIZATION MEASURES OR OTHERWISE, TWICE WEEKLY INSPECTIONS SHALL RESUME. THE DIVISION MAY INSPECT THE SITE TO CONFIRM OR DENY THE NOTIFICATION TO CONDUCT MONTHLY INSPECTIONS.
13. INSPECTORS PERFORMING THE REQUIRED TWICE WEEKLY INSPECTIONS MUST HAVE AN ACTIVE CERTIFICATION AND A RECORD OF CERTIFICATION MUST BE KEPT ON SITE. BASED ON THE RESULTS OF THE INSPECTION, ANY INADEQUATE CONTROL MEASURES OR CONTROL MEASURES IN DESPAIR SHALL BE REPLACED OR MODIFIED, OR REPAIRED AS NECESSARY, BEFORE THE NEXT RAIN EVENT, BUT IN NO CASE MORE THAN 7 DAYS AFTER THE NEED IDENTIFIED.
14. OUTFALL POINTS SHALL BE INSPECTED TO DETERMINE WHETHER EPSC MEASURES ARE EFFECTIVE IN PREVENTING SIGNIFICANT IMPACTS TO RECEIVING WATERS. WHERE DISCHARGE LOCATIONS ARE INACCESSIBLE, NEARBY DOWNSTREAM LOCATIONS SHALL BE INSPECTED. LOCATIONS WHERE VEHICLES ENTER OR EXIT THE SITE SHALL BE INSPECTED FOR EVIDENCE OF OFFSITE SEDIMENT TRACKING.

TREE PROTECTION NOTES

1. ANY REQUIRED EXCAVATION IN OR AROUND THE PROTECTION ZONE TO ACCOMMODATE UNDERGROUND SERVICES, FOOTINGS, ETC., SHALL BE INDICATED ON THE PLAN, AND SHALL BE EXCAVATED BY HAND. IN ADDITION, RELATED ROOT PRUNING SHALL BE ACCOMPLISHED BY A CERTIFIED ARBORIST VIA ANSI A-300-95 STANDARD SO AS TO MINIMIZE IMPACT OF THE GENERAL ROOT SYSTEM.
2. THE STORAGE OF BUILDING MATERIALS OR STOCKPILING SHALL NOT BE PERMITTED WITHIN THE LIMITS OF OR AGAINST THE PROTECTION BARRIERS.
3. TREES WITHIN THE PROTECTION BARRIERS MUST BE ADEQUATELY CARED FOR THROUGHOUT THE CONSTRUCTION PROCESS (I.E., THEY MUST BE WATERED SUFFICIENTLY, PARTICULARLY IF THE TREE'S ROOT SYSTEM HAS BEEN DISTURBED BY EXCAVATION). FILL SHALL NOT BE PLACED UPON THE ROOT SYSTEM IN SUCH A MANNER AS TO ENDANGER THE HEALTH OR LIFE OF THE AFFECTED TREE.
4. TREE PROTECTION BARRIER SHALL BE CONSTRUCTED PRIOR TO THE ISSUANCE OF ANY PERMITS AND SHALL REMAIN INTACT THROUGHOUT THE ENTIRE PERIOD OF CONSTRUCTION.

SITE GRADING & STORM DRAINAGE NOTES

EROSION CONTROL SEDIMENT BARRIERS AND TREE PROTECTION BARRIER SHALL BE INSTALLED PRIOR BEGINNING SITE WORK.

1. NO HEAVY EQUIPMENT SHALL CROSS OR BE STORED OUTSIDE THE LIMITS OF CONSTRUCTION, WITHIN TREE PROTECTIONS ZONES, OR UNDER THE DRIP LINE OF EXISTING TREES TO REMAIN.
2. TOPSOIL STRIPPED FROM AREAS TO BE GRADED SHALL BE STOCKPILED ON SITE IN A LOCATION APPROVED BY THE OWNER'S REPRESENTATIVE. DRAINAGE SHALL BE ROUTED AROUND STOCKPILE LOCATIONS FOR THE DURATION OF GRADING OPERATIONS. EROSION CONTROL MEASURES SHALL BE INSTALLED TO PREVENT LOSS OF TOPSOIL MATERIAL.
3. PRIOR TO BEGINNING CONSTRUCTION, CONTRACTOR SHALL REVIEW GEOTECHNICAL REPORT.
4. ALL CUT AND FILL SHALL BE PERFORMED UNDER THE DIRECTION/OBSERVATION OF THE GEOTECHNICAL ENGINEER.
5. THE SUITABLITY OF SOILS FOR FILL MATERIAL SHALL BE DETERMINED BY THE GEOTECHNICAL ENGINEER.
6. UNLESS DIRECTED OTHERWISE BY GEOTECHNICAL ENGINEER, ALL FILL AREAS SHALL BE RAISED IN LIFTS NOT EXCEEDING 8" IN THICKNESS. THE RELATIVE COMPACTION OF EACH LAYER SHALL NOT BE LESS THAN 95% OF THE STANDARD PROCTOR MAXIMUM DRY DENSITY (ASTM D-698) IN ALL AREAS OF FILL WITHIN OPEN AREAS AND 98% OF SAME SPECIFICATION FOR AREAS UNDER ROADS, PARKING, SIDEWALKS, BUILDING SLABS, AND FOUNDATIONS.
7. ALL GRADING SHALL BE COMPLETED TO THE GRADES INDICATED WITHIN THESE PLANS. FINAL GRADES SHALL PROVIDE PROPER DRAINAGE AND PREVENT STANDING WATER.
8. ALL STORM DRAINAGE CASTINGS TO BE JOHN BOUCHARD & SONS CO. OR APPROVED EQUAL, UNLESS OTHERWISE NOTED.
9. ALL STORM DRAINAGE PIPES TO BE RCP, CLASS III, UNLESS OTHERWISE NOTED.

SITE UTILITY NOTES

1. ALL MATERIALS AND WORKMANSHIP FOR UTILITY LINES AND APPURTENANCES SHALL BE IN STRICT COMPLIANCE WITH THE GOVERNING UTILITY COMPANY AND LOCAL CODES. PRIOR TO CONSTRUCTION CONTRACTOR SHALL NOTIFY UTILITY COMPANY. (SEE UTILITY CONTACT INFORMATION)
2. CONTRACTOR SHALL COORDINATE SITE ELECTRICAL, GAS, TELEPHONE, AND CABLE WITH THE RESPECTIVE UTILITY COMPANY FOR SERVICE LAYOUT AND DESIGN INFORMATION. ANY PROPOSED LAYOUT OF THESE UTILITIES DEPICTED ON THESE DRAWINGS IS GRAPHICAL ONLY AND NOT INTENDED TO REPRESENT DESIGN OF THESE UTILITIES.
3. PRIOR TO COMMENCEMENT OF CONSTRUCTION, CONTRACTOR SHALL OBTAIN ALL PERMITS AND PAY ANY REQUIRED TAP AND CONNECTION FEES.
4. ALL TRENCHING, PIPE LAYING AND BACKFILLING SHALL BE IN ACCORDANCE WITH FEDERAL OSHA REGULATIONS.
5. SITE CONTRACTOR SHALL CONSTRUCT ALL UTILITY SERVICES TO WITHIN 5' OF BUILDING.
6. CONTRACTOR SHALL BE RESPONSIBLE FOR COORDINATING THE SEQUENCING OF CONSTRUCTION FOR ALL UTILITY LINES TO AVOID CONFLICTS.
7. CONTRACTOR SHALL COORDINATE SIZE AND LOCATION OF WATER, SEWER AND STORMWATER CONNECTIONS TO THE BUILDING AS DEPICTED ON THE BUILDING MECHANICAL PLANS AND THE SITE UTILITY PLAN AND NOTIFY THE ENGINEER OR OWNER'S REPRESENTATIVE OF ANY DISCREPANCIES.
8. WATER SERVICES LINES ¼" – 3" SHALL BE TYPE-K COPPER AND 4" OR LARGER SHALL BE DUCTILE IRON PIPE – CLASS 52 UNLESS OTHERWISE REQUIRED BY UTILITY COMPANY.
9. FIRE LINE INSTALLATION AND THRUST BLOCKING LOCATION AND SIZING SHALL BE PER N.F.P.A. AND LOCAL FIRE DEPARTMENT REQUIREMENTS.
10. WATER METER MANUFACTURER/MODEL NUMBER AND VAULT SPECIFICATIONS SHALL BE PER THE WATER UTILITY COMPANY.
11. BACKFLOW DEVICE (RPBP/DDCVA) MANUFACTURER/MODEL NUMBER SHALL BE PER THE WATER UTILITY COMPANY.
12. CONTRACTOR SHALL INSTALL HOT BOX ENCLOSURE (PRE-FINISHED DARK GREEN) ON ALL EXTERIOR ABOVE-GROUND BACKFLOW DEVICES. DOMESTIC AND FIRE BACKFLOW DEVICES SHALL BE HEATED. CONTRACTOR SHALL COORDINATE PROVIDING APPROPRIATE ELECTRICAL SERVICE TO BACKFLOW DEVICE.
13. CONTRACTOR SHALL COORDINATE LOCATION OF BACKFLOW DEVICE WITH THE BUILDING MECHANICAL DRAWINGS.
14. SANITARY SEWER SERVICE LINES SHALL BE SDR 35 PVC UNLESS SPECIFIED OTHERWISE.
15. MAINTAIN A 10' HORIZONTAL AND 18" VERTICAL SEPARATION BETWEEN SANITARY SEWER AND WATER LINES.
16. ALL FIRE LINE MAINS TO BE INSTALLED BY LICENSED FIRE PROTECTION CONTRACTOR.

GEOTECHNICAL NOTE

1. NO GEOTECHNICAL STUDY HAS BEEN CONDUCTED ON THIS SITE. HOWEVER, THE DESIGN FOR THE SITE IMPROVEMENTS SHOWN ON THIS PLAN HAS RELIED ON EXPERIENCE WITH SIMILAR PROJECTS AND SIMILAR SOIL/SITE CONDITIONS. IF, IN THE PURSUIT OF THIS WORK BY THE CONTRACTOR, CONDITIONS OR CIRCUMSTANCES ARE ENCOUNTERED THAT ARE DIFFERENT THAN REFLECTED IN THESE PLANS OR THAT APPEAR TO IMPACT THE SCOPE OF THE WORK, THE CONTRACTOR WILL IMMEDIATELY NOTIFY THE CIVIL ENGINEER, AND THE OWNER/DEVELOPER BEFORE ANY REMEDIAL COURSE OF ACTION OR DESIGN CHANGE IS INITIATED. ALL PARTIES (OWNER, CIVIL ENGINEER, PROPER GOVERNMENTAL AGENCIES, AND CONTRACTOR) MUST BE IN AGREEMENT AND THE MAGNITUDE OF THE COST/TIME REQUIRED FOR THE MEASURES ESTABLISHED.

RSA SPECIAL NOTES

PROJECT SPECIFIC NOTES

1. CONTRACTOR TO ADJUST EXITING UTILITY CASTINGS AS NECESSARY.
2. THIS PROJECT WILL BE SUBJECT TO THE INSPECTION AND FINAL APPROVAL BY THE CITY OF GALLATIN.

RAGAN•SMITH
LAND PLANNERS • CIVIL ENGINEERS
LANDSCAPE ARCHITECTS • SURVEYORS
NASHVILLE
CHATTANOOGA
www.ragansmith.com

CALEB J. THORNE
STATE OF TENNESSEE

HUNTER POINTE

PHASE 1, ROADWAY AND LOTS 1-3

REALTY AMERICA GROUP, LP

STATE ROUTE 386 AT LONG HOLLOW PIKE, CITY OF GALLATIN, SUMNER COUNTY, TENNESSEE

JOB NO. 05149	WK. ORDER 9432
DESIGNED:	W. MAGILL
DRAWN:	B. SHRUM
SCALE:	NO SCALE
DATE:	APRIL 23, 2014
REVISIONS	

CIVIL NOTES

C0.1

LEGEND

CM(O)	CONCRETE MONUMENT (OLD)	—P—	OVERHEAD ELECTRIC POWER LINE
IR(O)	IRON ROD (OLD)	—P&T—	OVERHEAD POWER AND TELEPHONE LINES
	FIRE HYDRANT	—SA—	SANITARY SEWER LINE
	WATER VALVE	—G—	GAS LINE
	CATCH BASIN	—W—	WATER LINE
	SANITARY SEWER MANHOLE	—X—X—	FENCE
	UTILITY POLE	INV	INVERT
	UTILITY POLE W/ ANCHOR	ELEV	ELEVATION
	UTILITY POLE W/ LIGHT	RCP	REINFORCED CONCRETE PIPE
	GAS VALVE	CMP	CORRUGATED METAL PIPE
	DECIDUOUS TREE	CPP	CORRUGATED PLASTIC PIPE
	EVERGREEN TREE		COBBLESTONE SURFACE
			CONCRETE SURFACE
			ASPHALT SURFACE

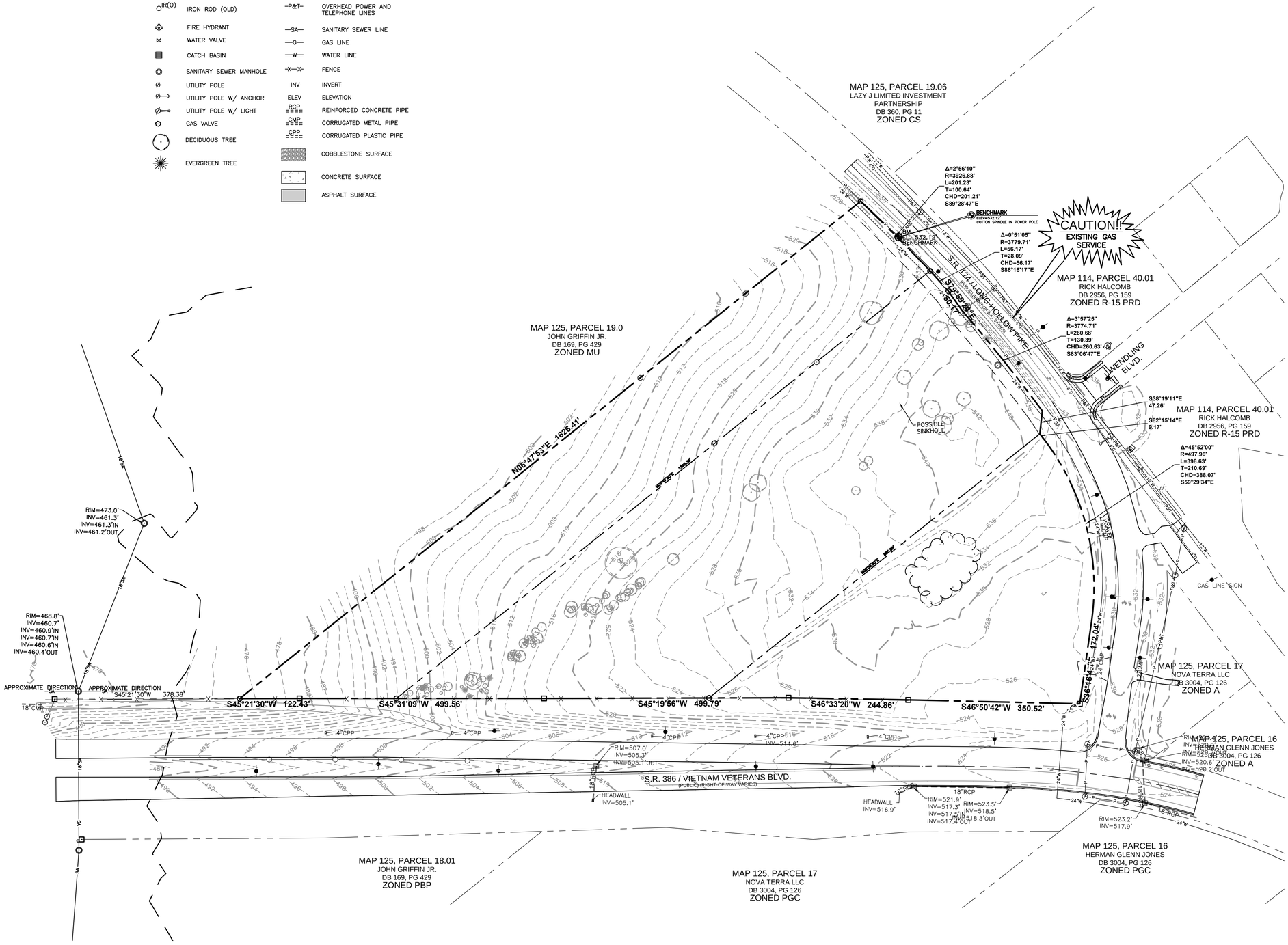

IF YOU DIG TENNESSEE...
CALL US FIRST!
811
TENNESSEE ONE CALL
IT'S THE LAW

RAGAN•SMITH
LAND PLANNERS • CIVIL ENGINEERS
LANDSCAPE ARCHITECTS • SURVEYORS
NASHVILLE
210 RAINS AVENUE
P.O. BOX 200070
NASHVILLE, TENNESSEE 37206
(615) 244-8591
CHATTANOOGA
1410 COURTLAND STREET
SUITE 200
CHATTANOOGA, TN 37408
(423) 490-9400
• www.ragansmith.com •

CALEB J. THORNE
REGISTERED PROFESSIONAL ENGINEER
AGRICULTURE
NO. 111759
STATE OF TENNESSEE
5/9/14

HUNTER POINTE
PHASE 1, ROADWAY AND LOTS 1-3
REALTY AMERICA GROUP, LP

STATE ROUTE 386 AT LONG HOLLOW PIKE, CITY OF GALLATIN, SUMNER COUNTY, TENNESSEE

JOB NO.	05149
WK. ORDER	9432
DESIGNED:	W. MAGILL
DRAWN:	B. SHRUM
SCALE:	1" = 100'
DATE:	APRIL 23, 2014
REVISIONS:	

EXISTING CONDITIONS PLAN

C0.2

G:\05149-HUNTA\CIVIL ENGINEERING_INFRASTRUCTURE PLANS_PLAN SHEETS\5432 INFRASTRUCTURE EXISTING.DWG
PLOTTED BY: ROBBY SHRUM ON: 5/9/2014 2:39 PM LAST UPDATED BY: BCS ON: 5/8/2014 10:36 AM

SITE DATA:

PROPERTY INFORMATION:

STREET ADDRESS:	1113 LONG HOLLOW PIKE
CIVIL DISTRICT:	4th
TAX MAP:	125
PARCEL:	17.01, 18.02, AND 18.03
CURRENT ZONING:	MU (MIXED USE)
PROPOSED LAND USE:	COMMERCIAL

OWNER / DEVELOPER:
REALTY AMERICA GROUP, LP
KIP SOWDEN
4245 NORTH CENTRAL EXPRESSWAY, SUITE 420
DALLAS, TX 75206
(214) 522-3300
KIP@RREAF.COM

PROJECT ENGINEER:
CALEB J. THORNE, PE
RAGAN-SMITH & ASSOCIATES, INC.
315 WOODLAND STREET
NASHVILLE, TN 37206
(615) 244-8591
CTHORNE@RAGANSMITH.COM

SURVEY INFORMATION:
BOUNDARY AND TOPOGRAPHIC INFORMATION TAKEN FROM A SURVEY PERFORMED BY RAGAN-SMITH-ASSOCIATES, INC. DATED MARCH 7, 2014.

FLOOD INFORMATION:
FEMA MAP #: 47165C0313E
EFFECTIVE DATE: APRIL 17, 2012
THE PLAN SHOWS "BY SCALED MAP LOCATION AND GRAPHIC PLOTTING ONLY," THE PROPERTY LIES WITHIN FLOOD ZONE "X", AS DESIGNATED ON CURRENT FEDERAL EMERGENCY MANAGEMENT AGENCY MAP NO. 47165C0313E, WITH AN EFFECTIVE DATE OF APRIL 17, 2012, WHICH MAKES UP A PART OF THE NATIONAL FLOOD INSURANCE ADMINISTRATION REPORT; COMMUNITY NO. 470185, PANEL NO. 0313, SUFFIX G, WHICH IS THE CURRENT FLOOD INSURANCE RATE MAP FOR THE COMMUNITY IN WHICH SAID PREMISES IS SITUATED. SAID MAP DEFINES ZONE "X" UNDER "OTHER AREAS" AS BEING "AREAS DETERMINED TO BE OUTSIDE THE 500-YEAR FLOODPLAIN."

GEOTECHNICAL INFORMATION:
NO GEOTECHNICAL STUDY HAS BEEN CONDUCTED ON THIS SITE. HOWEVER, THE DESIGN FOR SITE IMPROVEMENTS SHOWN ON THIS PLAN HAS RELIED ON EXPERIENCE WITH SIMILAR PROJECTS AND SIMILAR SOIL/SITE CONDITIONS. IF, IN THE PURSUIT OF THIS WORK BY THE CONTRACTOR, CONDITIONS OR CIRCUMSTANCES ARE ENCOUNTERED THAT ARE DIFFERENT THAN REFLECTED IN THESE PLANS OR THAT APPEAR TO IMPACT THE SCOPE OF THE WORK, THE CONTRACTOR WILL IMMEDIATELY NOTIFY THE CIVIL ENGINEER AND THE OWNER/DEVELOPER BEFORE ANY REMEDIAL COURSE OF ACTION OR DESIGN CHANGE IS INITIATED. ALL PARTIES (OWNER, CIVIL ENGINEER, PROPER GOVERNMENTAL AGENCIES, AND CONTRACTOR) MUST BE IN AGREEMENT AND THE MAGNITUDE OF THE COST/TIME REQUIRED FOR THE MEASURES ESTABLISHED.

STATEMENT REGARDING OPEN SPACE:
THE PROPERTY OWNERS' MANAGEMENT ASSOCIATION (P.O.M.A.) WILL BE RESPONSIBLE FOR MAINTENANCE OF GREEN SPACE. THERE IS NO COMMON OPEN SPACE.

STATEMENT OF FINANCIAL RESPONSIBILITY
THE PROPERTY KNOWN AS PARCELS 17.01, 18.02, AND 18.03 ON SUMNER COUNTY PROPERTY MAP 125 IS OWNED OR OPTIONED BY GALLATIN LAND LLC. AT PRESENT, THE BANK COMMITMENTS AND FINANCING IS PROVIDED BY IBERIA BANK AND TRUST.

SIGNAGE STATEMENT
PROPOSED GROUND SIGN LOCATIONS HAVE BEEN SHOWN AND DETAILS FOR THESE WILL BE PROVIDED BY OTHERS AT A LATER DATE.

SURETY STATEMENT
SURETY WILL BE POSTED BY THE DEVELOPER AS REQUIRED BY SECTION 15.03.080. IT IS ANTICIPATED THAT THE CITY WILL SET THE AMOUNTS AT A GIVEN TIME.

PRELIMINARY DEVELOPMENT SCHEDULE

PHASE / OUTPARCEL / EST. COMPLETION DATE
INFRASTRUCTURE & LOTS 1-3 / FALL 2014
PHASE 1 / F & G / FALL 2014
PHASE 2 / A / SPRING 2015
PHASE 3 / H & I / FALL 2015
PHASE 4 / D & E / SPRING 2016
PHASE 5 / B & C / FALL 2016
ESTIMATED PROJECT COMPLETION: 2016

LANDSCAPE REQUIREMENTS FOR MU:
- 1.71 AC. OF REQUIRED SITE LANDSCAPE AREA (7.5% MIN.). INCLUSIVE OF INTERIOR PARKING LOT PLANTING AREA.
- 149 TREES REQUIRED AT 1 TREE/500 SF OF SITE LANDSCAPE AREA. (2" CALIPER MIN.) EXCLUSIVE OF REQUIRED LANDSCAPE BUFFERYARDS.
- 1,140 SHRUBS REQUIRED AT 50 SHRUBS/1 AC OF LOT SITE AREA (18" HEIGHT MIN.). INCLUSIVE OF REQUIRED BUFFERYARDS AND SITE LANDSCAPE AREA AND EXCLUSIVE OF SCREENING FOR PARKING.
- INTERIOR PLANTING AREAS OR TREE ISLANDS REQUIRE 2-1/2" CALIPER TREES

PERFORMANCE STANDARDS NOTE:
THIS SITE PLAN WILL MEET ALL APPROPRIATE PERFORMANCE AND DESIGN STANDARDS PER ARTICLE 13.02 OF THE GALLATIN ZONING ORDINANCE.

MU BUFFER & LANDSCAPE NOTE:
1. ALL SITES SHALL MEET BUFFER YARD SCREENING AND LANDSCAPE REQUIREMENTS AS DEFINED BY THE GALLATIN ZONING ORDINANCE, IN ADDITION TO STREET BUFFERYARD REQUIREMENTS SHOWN ON THIS PLAN.
2. PROJECT WILL PROVIDE THE ADDITIONAL LANDSCAPING AND SCREENING REQUIREMENTS SPECIFIED IN SECTION 08.04.060.B OF THE GALLATIN ZONING ORDINANCE.
3. LANDSCAPED AREA SHALL BE DEFINED AS AN AREA CONSISTING OF GRASS, SHRUBS, TREES, FLOWERS, GROUND COVER, OR OTHER ORGANIC PLANT MATERIAL IN THE MINIMUM PERCENTAGE AS NOTED. A SIDEWALK/ BIKE PATH IS THE ONLY OTHER PERMITTED MATERIAL WITHIN A LANDSCAPED AREA.

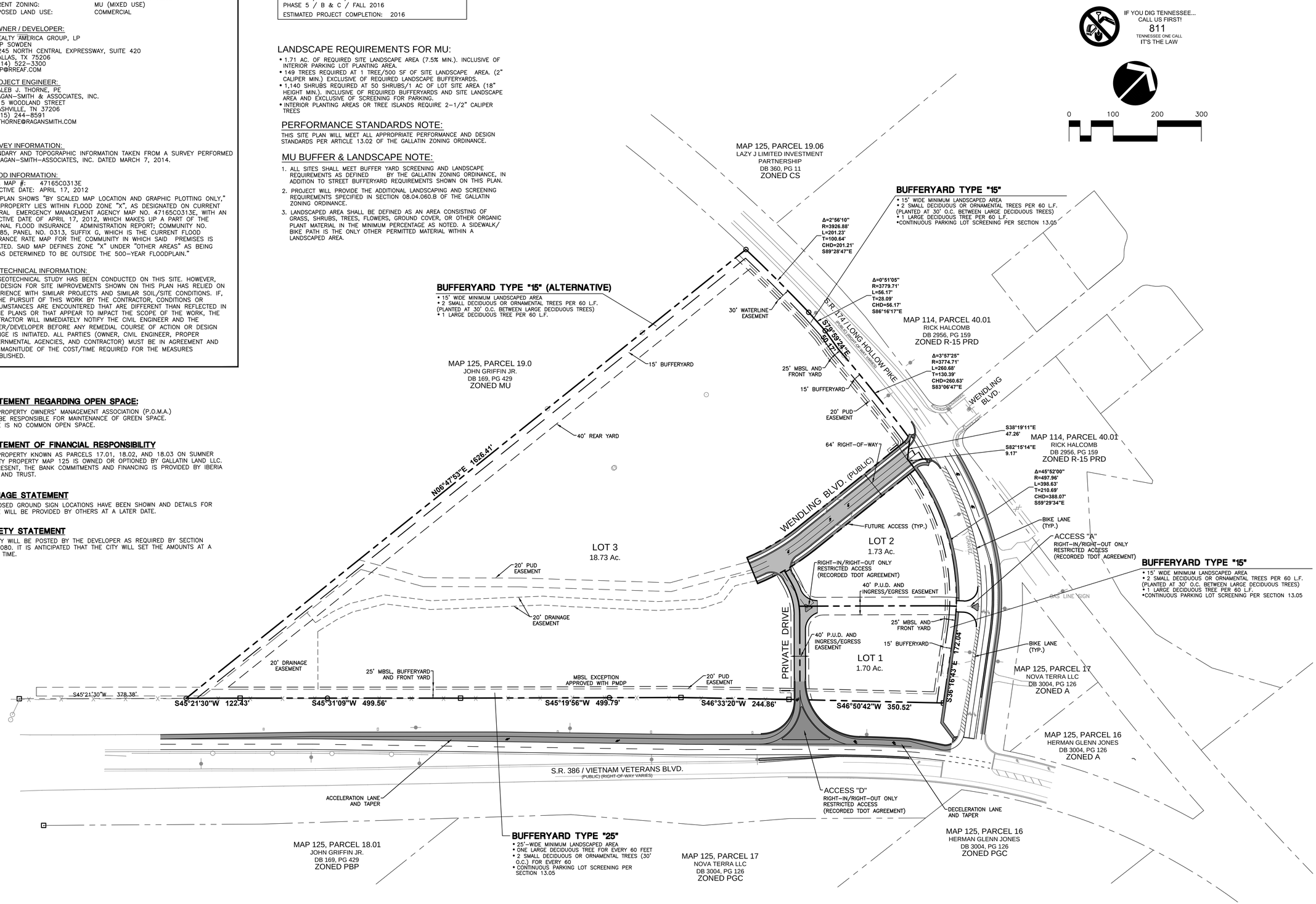

RAGAN•SMITH
LAND PLANNERS • CIVIL ENGINEERS
LANDSCAPE ARCHITECTS • SURVEYORS
NASHVILLE
315 WOODLAND STREET
P.O. BOX 60070
NASHVILLE, TN 37206
(615) 244-8591
CHATTANOOGA
1410 CONVENTION CENTER DR.
SUITE 201
CHATTANOOGA, TN 37405
(423) 490-9400
• www.ragansmith.com •

CALEB J. THORNE
REGISTERED ENGINEER
AGRICULTURE
COMMERCE
NO. 111759
STATE OF TENNESSEE
5/9/14

HUNTER POINTE
PHASE 1, ROADWAY AND LOTS 1-3
REALTY AMERICA GROUP, LP
STATE ROUTE 386 AT LONG HOLLOW PIKE, CITY OF GALLATIN, SUMNER COUNTY, TENNESSEE

JOB NO.	05149
WK. ORDER	9432
DESIGNED:	C. THORNE
DRAWN:	B. SHRUM
SCALE:	1" = 100'
DATE:	APRIL 23, 2014
REVISIONS	

OVERALL LAYOUT PLAN

C1.0

O:\05149-NASH\CIVIL ENGINEERING\C_ENGR_SHEETS\MASTER LAYOUT OVERALL.DWG
PLOTTED BY BOBBY SHRUM ON 5/9/2014 2:13 PM LAST UPDATED BY BCS ON 5/9/2014 2:14 PM

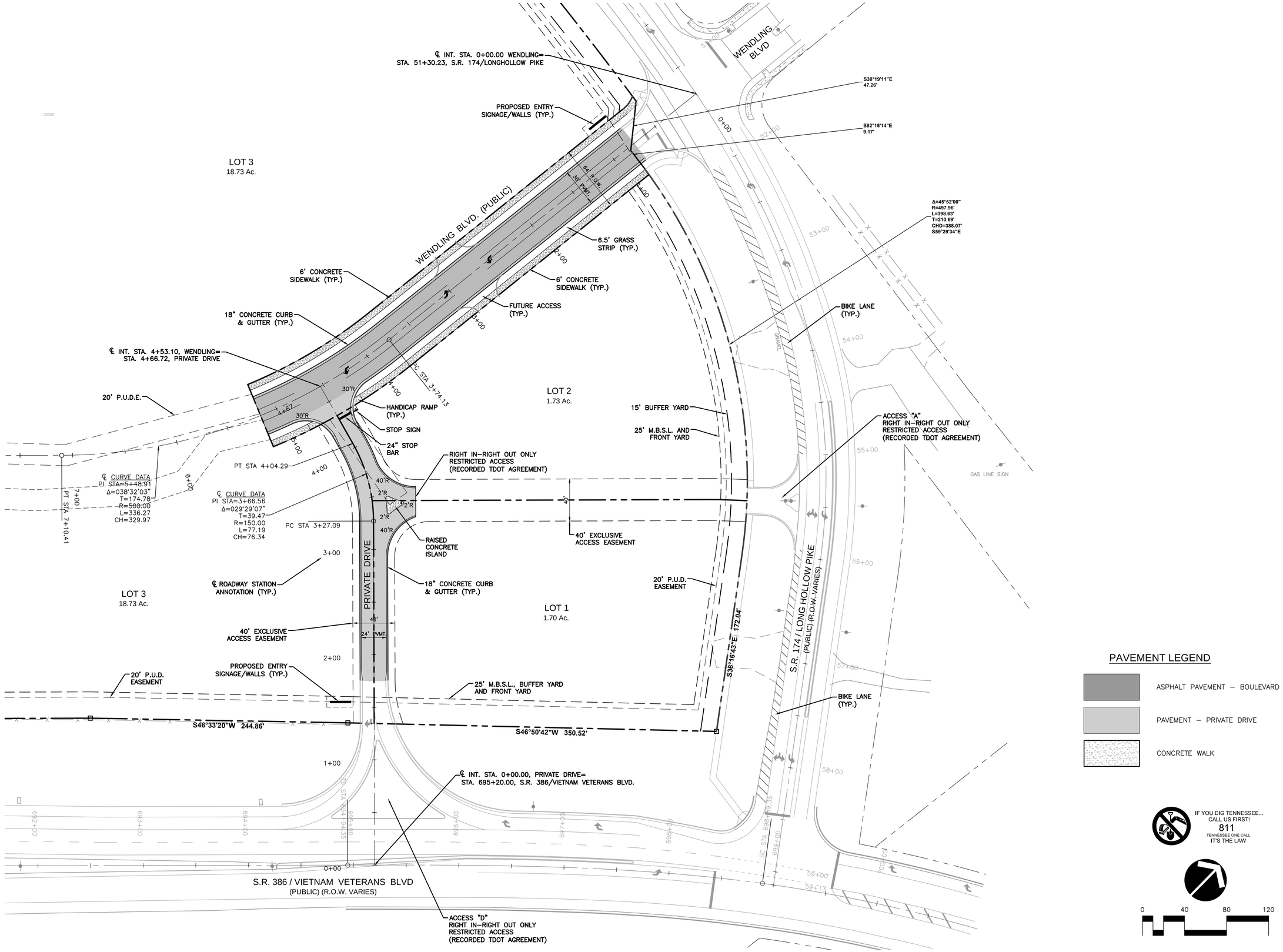

RAGAN•SMITH
LAND PLANNERS • CIVIL ENGINEERS
LANDSCAPE ARCHITECTS • SURVEYORS
NASHVILLE
P.O. BOX 60070
2400 CROCKETT STREET
NASHVILLE, TN 37206
(615) 244-8591
CHATTANOOGA
1410 CONVENTION CENTER
SUITE 200
CHATTANOOGA, TN 37405
(423) 490-9400
• www.ragansmith.com •

CALEB J. THORNE
REGISTERED PROFESSIONAL ENGINEER
AGRICULTURE
NO. 111759
STATE OF TENNESSEE
5/9/14

HUNTER POINTE
PHASE 1, ROADWAY AND LOTS 1-3
REALTY AMERICA GROUP, LP

STATE ROUTE 386 AT LONG HOLLOW PIKE, CITY OF GALLATIN, SUMNER COUNTY, TENNESSEE

JOB NO.	05149
WK. ORDER	9432
DESIGNED:	W. MAGILL
DRAWN:	B. SHRUM
SCALE:	1" = 40'
DATE:	APRIL 23, 2014

REVISIONS

ENLARGED SITE LAYOUT PLAN

C1.1

G:\05149-NASHLOW-ENGINEERING_INFRASTRUCTURE PLANS_PLAN SHEETS\NASH INFRASTRUCTURE LAYOUT.DWG
PLOTTED BY: ROBBY SHRUM ON: 5/9/2014 2:36 PM LAST UPDATED BY: WCS ON: 5/8/2014 11:01 AM

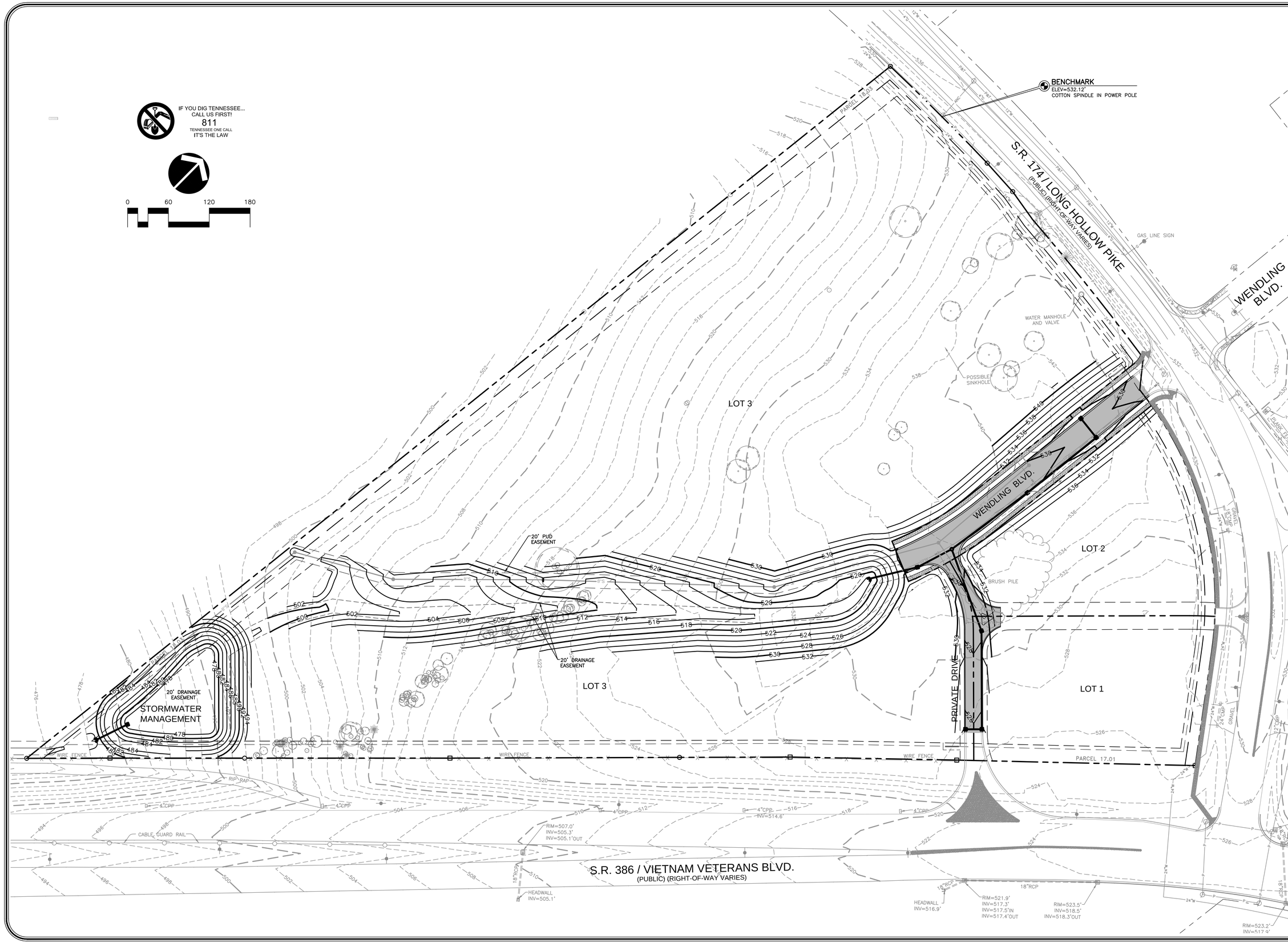

RAGAN•SMITH

LAND PLANNERS • CIVIL ENGINEERS
LANDSCAPE ARCHITECTS • SURVEYORS

NASHVILLE
P.O. BOX 200070
2400 ROSA L. PARKS BLVD.
NASHVILLE, TN 37206
(615) 244-8591

CHATTANOOGA
1410 CONVENTION CENTER
SUITE 200
CHATTANOOGA, TN 37405
(423) 490-9400

www.ragansmith.com

CALEB J. THORNE
TENNESSEE REGISTERED PROFESSIONAL ENGINEER
AGRICULTURE
No. 111759
STATE OF TENNESSEE

HUNTER POINTE

PHASE 1, ROADWAY AND LOTS 1-3

REALTY AMERICA GROUP, LP

STATE ROUTE 386 AT LONG HOLLOW PIKE, CITY OF GALLATIN, SUMNER COUNTY, TENNESSEE

JOB NO.	05149
WK. ORDER	9432
DESIGNED:	W. MAGILL
DRAWN:	B. SHRUM
SCALE:	1" = 60'
DATE:	APRIL 23, 2014
REVISIONS	

OVERALL GRADING AND DRAINAGE PLAN

C3.0

G:\05149-NOVLCVA\-ENGINEERING_INFRASTRUCTURE PLANS_PLAN SHEET\05149-INFRASTRUCTURE GRADING-OVERALL.DWG
PLOTTED BY: BOBBY SHRUM ON: 5/9/2014 2:39 PM LAST UPDATED BY: RCS ON: 5/8/2014 5:19 PM

DRAINAGE STRUCTURE SCHEDULE				
NO.	TYPE*	CASTING	RIM	INVERTS
6A	HEADWALL	REINFORCED CONCRETE	520.73	517.98 (7)
7	SINGLE CURB INLET	3300	530.32	518.70 (6A) 518.90 (8)
8	JUNCTION	1111	531.16	519.40 (7) 522.60 (9) 519.60 (11)
9	SINGLE CURB INLET	3300	530.29	524.00 (8) 524.20 (10)
10	DOUBLE CURB INLET	3300	529.25	525.50 (9) 525.70 (10A)
10A	DOUBLE CURB INLET	3300	529.25	525.90 (10)
11	SINGLE CURB INLET	3300	528.30	520.30 (8) 520.50 (12)
12	SINGLE CURB INLET	3300	525.47	521.50 (11) 521.70 (12A)
12A	SINGLE CURB INLET	3300	525.47	521.90 (12)
13	HEADWALL	---	479.25	476.50 (14)
14	OUTLET CONTROL	4310	485.00	477.00 (13)

PIPE TABLE			
LINE	SIZE/TYPE	LENGTH	SLOPE
6A–7	30" RCP	72'	1.00%
7–8	30" RCP	57'	0.88%
8–9	24" RCP	139'	1.01%
8–11	24" RCP	128'	0.55%
9–10	24" RCP	130'	1.00%
10–10A	18" RCP	36'	0.56%
11–12	24" RCP	145'	0.69%
12–12A	18" RCP	24'	0.83%
13–14	24" RCP	50'	0.99%

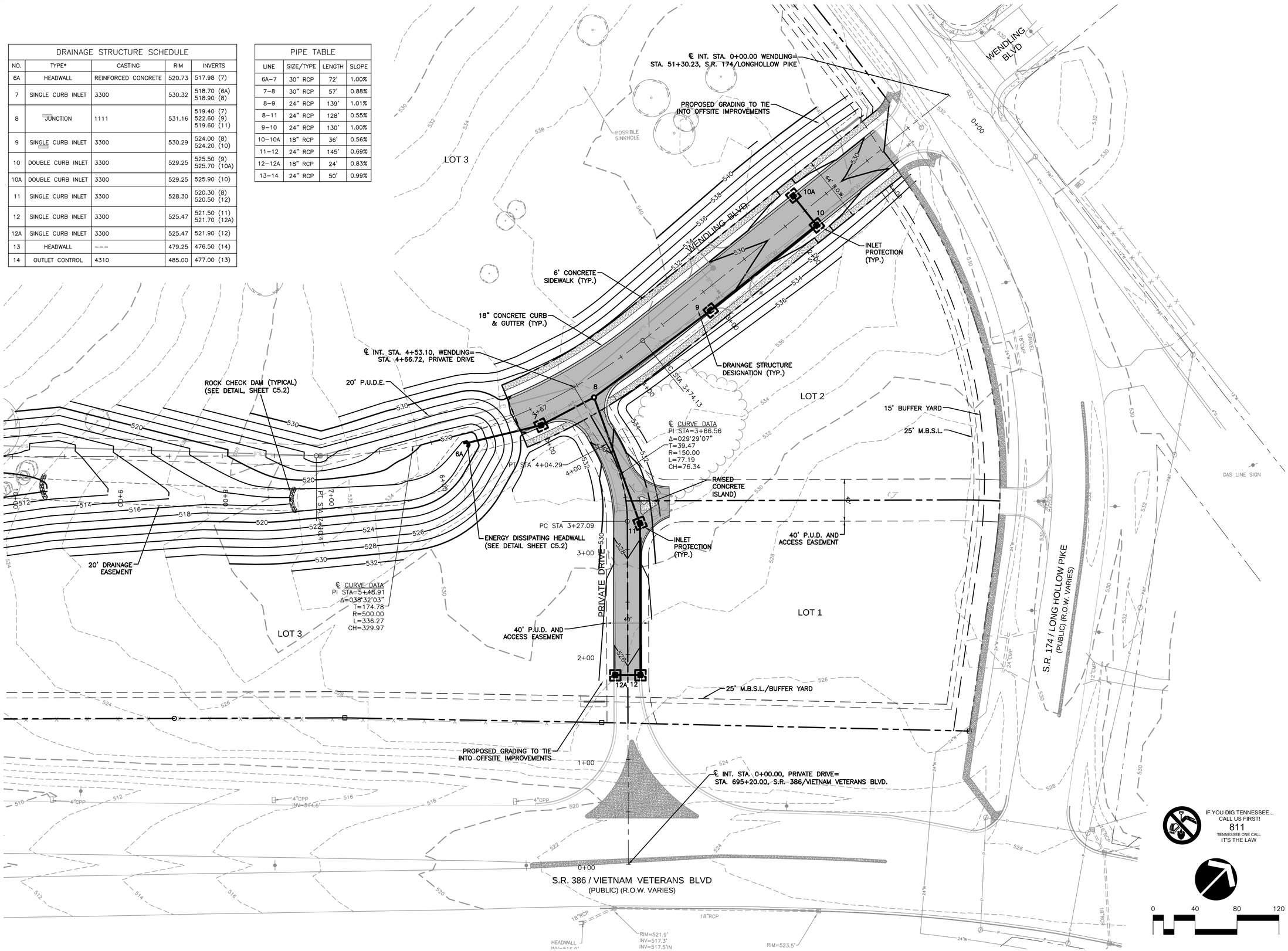

RAGAN•SMITH

LAND PLANNERS • CIVIL ENGINEERS
LANDSCAPE ARCHITECTS • SURVEYORS

CHATTANOOGA
1410 COMMERCE STREET, SUITE 200
CHATTANOOGA, TENNESSEE 37402
(423) 490-9400

NASHVILLE
2100 WEST END AVENUE, SUITE 1000
P.O. BOX 200070
NASHVILLE, TENNESSEE 37206
(615) 244-8591

• www.ragansmith.com •

CALEB J. THORNE
AGRICULTURE
NO. 111759
STATE OF TENNESSEE
5/9/14

HUNTER POINTE
PHASE 1, ROADWAY AND LOTS 1-3
REALTY AMERICA GROUP, LP

STATE ROUTE 386 AT LONG HOLLOW PIKE, CITY OF GALLATIN, SUMNER COUNTY, TENNESSEE

JOB NO. 05149	WK. ORDER: 9432
DESIGNED:	W. MAGILL
DRAWN:	B. SHRUM
SCALE:	1" = 40'
DATE:	APRIL 23, 2014

REVISIONS

ENLARGED GRADING, DRAINAGE, AND EROSION PLAN

C3.1

G:\RAGAN-NASHVILLE\ENGINEERING_INFRASTRUCTURE PLANS_PLAN SHEETS\9432-INFRASTRUCTURE GRADING.DWG
PLOTTED BY BOBBY SHRUM ON 5/9/2014 2:29 PM LAST UPDATED BY BCS ON 5/9/2014 2:34 PM

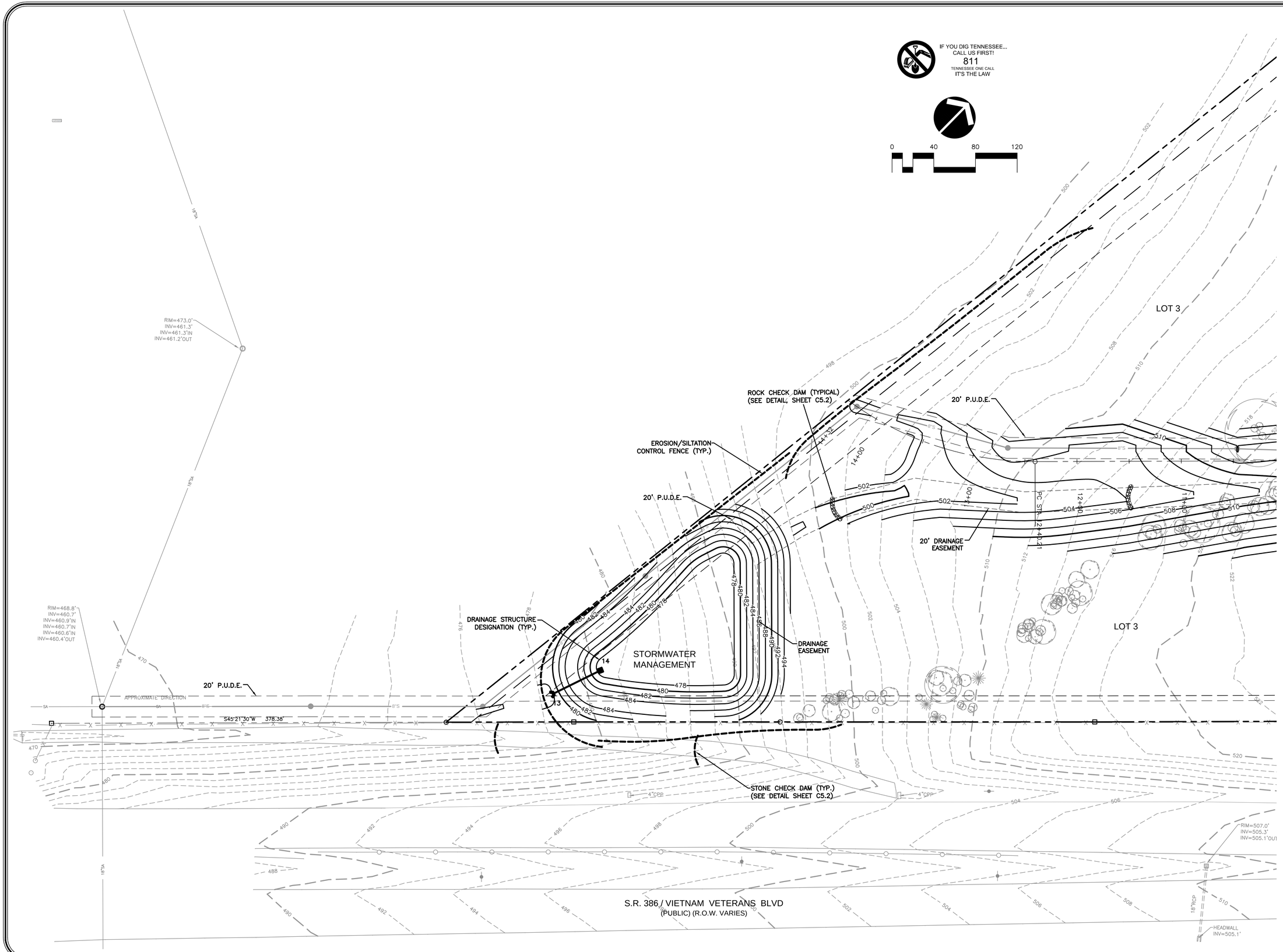

RAGAN•SMITH

LAND PLANNERS • CIVIL ENGINEERS
LANDSCAPE ARCHITECTS • SURVEYORS

NASHVILLE
P.O. BOX 60070
1400 CENTURY BLVD, STREET
NASHVILLE, TN 37206
(615) 244-8591

CHATTANOOGA
1410 COURTYARD STREET
SUITE 200
CHATTANOOGA, TN 37405
(423) 490-9400

• www.ragansmith.com •

CALEB J. THORNE
REGISTERED
AGRICULTURE
ENGINEER
No. 111759
STATE OF TENNESSEE

5/8/14

HUNTER POINTE

PHASE 1, ROADWAY AND LOTS 1-3

REALTY AMERICA GROUP, LP

STATE ROUTE 386 AT LONG HOLLOW PIKE, CITY OF GALLATIN, SUMNER COUNTY, TENNESSEE

JOB NO. 05149	WK. ORDER 9432
DESIGNED:	W. MAGILL
DRAWN:	B. SHRUM
SCALE:	1" = 40'
DATE:	APRIL 23, 2014

REVISIONS

ENLARGED GRADING, DRAINAGE, AND EROSION PLAN

C3.2

G:\SUB-NASHVILLE\ENGINEERING_INFRASTRUCTURE PLANS_PLAN SHEETS\NEO INFRASTRUCTURE GRADING.DWG
PLOTTED BY: ROBBY SHRUM ON: 5/9/2014 2:39 PM LAST UPDATED BY: RCS ON: 5/8/2014 5:34 PM

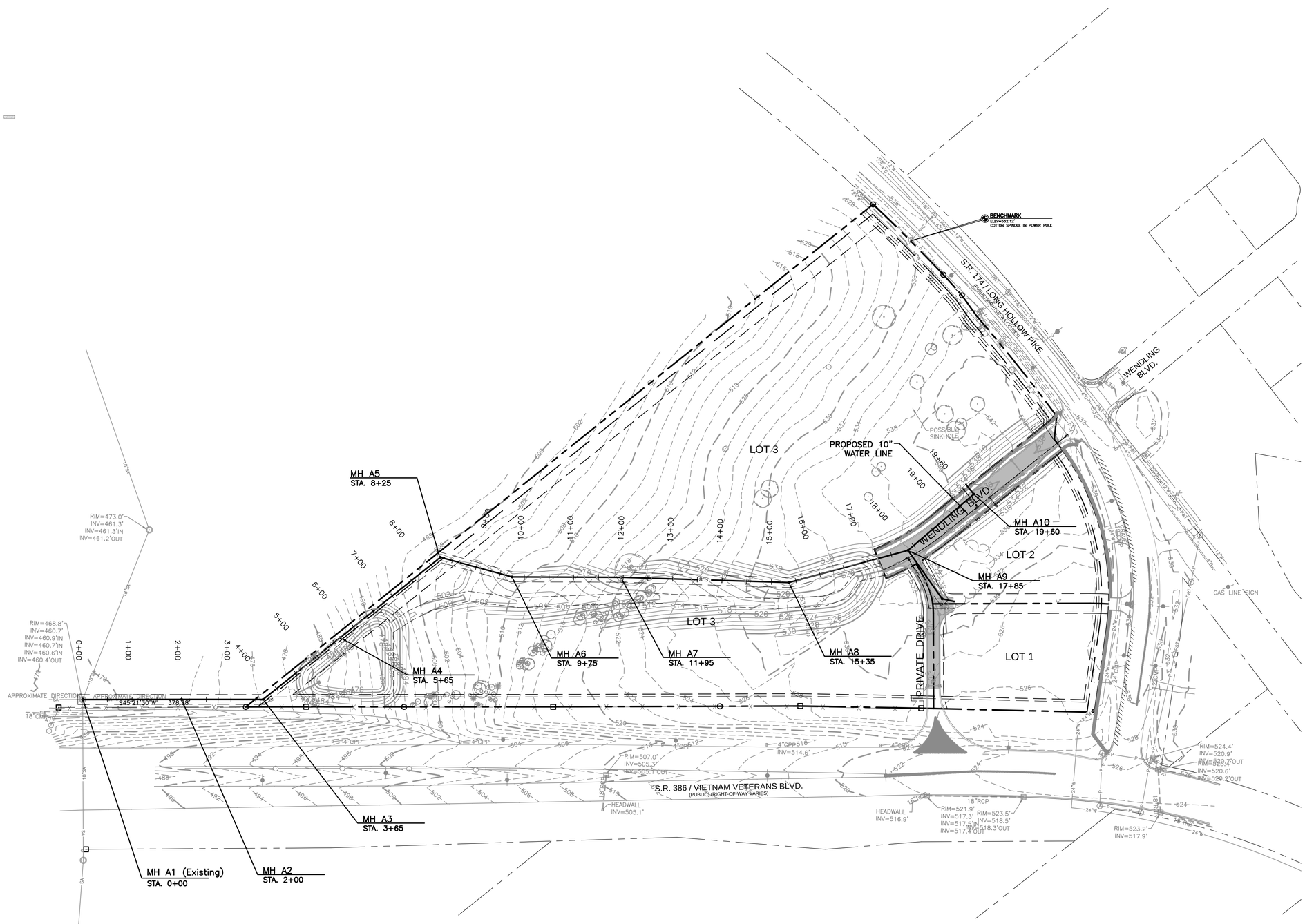

IF YOU DIG TENNESSEE...
CALL US FIRST!
811
TENNESSEE ONE CALL
IT'S THE LAW

0 100 200 300

RAGAN•SMITH

LAND PLANNERS • CIVIL ENGINEERS
LANDSCAPE ARCHITECTS • SURVEYORS

NASHVILLE
P.O. BOX 60070
424 CHURCH STREET
NASHVILLE, TN. 37206
(615) 244-8591

CHATTANOOGA
1410 COMMERCE STREET
SUITE 200
CHATTANOOGA, TN. 37402
(423) 490-9400

• www.ragansmith.com •

CALEB J. THORNE
REGISTERED PROFESSIONAL ENGINEER
AGRICULTURE
CIVIL ENGINEERING
No. 111759
STATE OF TENNESSEE

HUNTER POINTE

PHASE 1, ROADWAY AND LOTS 1-3

REALTY AMERICA GROUP, LP

STATE ROUTE 386 AT LONG HOLLOW PIKE, CITY OF GALLATIN, SUMNER COUNTY, TENNESSEE

JOB NO.	05149
WK. ORDER	9432
DESIGNED:	W. MAGILL
DRAWN:	B. SHRUM
SCALE:	1" = 100'
DATE:	APRIL 23, 2014

REVISIONS

OVERALL UTILITY PLAN

C4.0

G:\05149-NOVLCAN-ENGINEERING_INFRASTRUCTURE PLANS_PLAN SHEETS\9432-INFRASTRUCTURE UTILITY OVERALL.DWG
PLOTTED BY: BOBBY SHRUM ON: 5/6/2014 2:28 PM LAST UPDATED BY: BCS ON: 5/6/2014 11:09 AM

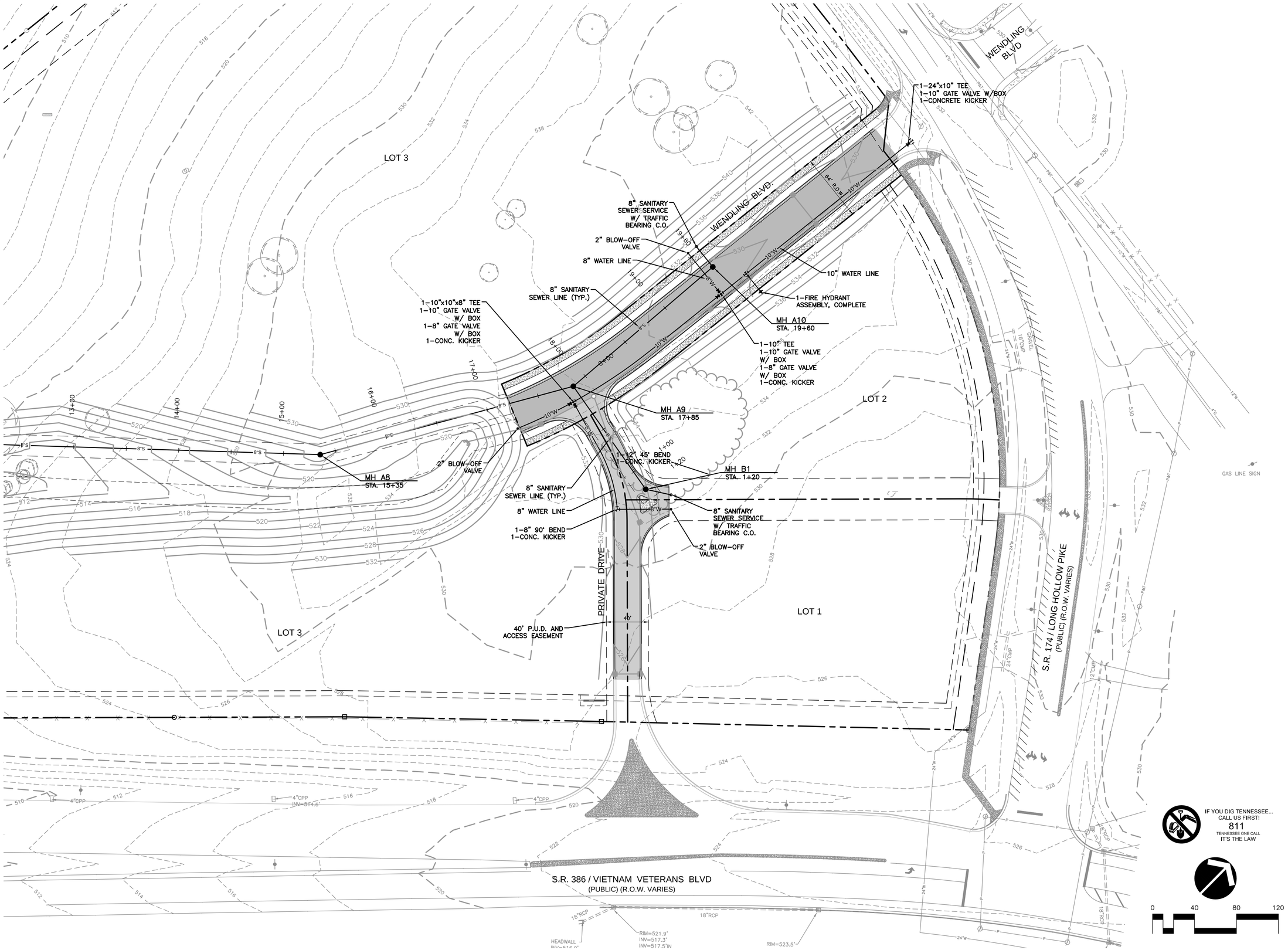

RAGAN•SMITH

LAND PLANNERS • CIVIL ENGINEERS
LANDSCAPE ARCHITECTS • SURVEYORS

CHATTANOOGA
1410 COMMERCE STREET, SUITE 200
CHATTANOOGA, TENNESSEE 37402
(423) 490-9400

NASHVILLE
P.O. BOX 200070
2400 ELM HILL PIKE, 37206
(615) 244-8591

• www.ragansmith.com •

CALEB J. THORNE
REGISTERED PROFESSIONAL ENGINEER
AGRICULTURE
No. 111759
STATE OF TENNESSEE

HUNTER POINTE

PHASE 1, ROADWAY AND LOTS 1-3

REALTY AMERICA GROUP, LP

STATE ROUTE 386 AT LONG HOLLOW PIKE, CITY OF GALLATIN, SUMNER COUNTY, TENNESSEE

JOB NO.	05149
WK. ORDER	9432
DESIGNED:	W. MAGILL
DRAWN:	B. SHRUM
SCALE:	1" = 40'
DATE:	APRIL 23, 2014

REVISIONS

ENLARGED UTILITY PLAN

C4.1

G:\RAN-NASH\CIVIL ENGINEERING_WRK\05149\CIVIL\PLANS_PLAN SHEETS\9432 INFRASTRUCTURE UTILITY.DWG
PLOTTED BY: BOBBY SHRUM ON: 5/6/2014 2:40 PM LAST UPDATED BY: BCS ON: 5/6/2014 11:19 AM

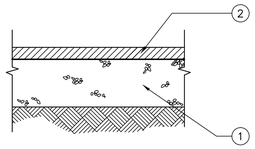

NOTES:
1. THIS PAVEMENT SECTION IS BASED ON TYPICAL AREA SOIL TYPES, SITE CONDITIONS AND LOADING. CONTRACTOR SHALL REFER TO GEOTECHNICAL STUDY FOR SITE SPECIFIC PAVEMENT RECOMMENDATIONS.
2. REFER TO "TDOT STANDARD SPECIFICATIONS AND BRIDGE CONSTRUCTION" FOR PAVING MATERIALS AND SPECIFICATIONS.

HEAVY DUTY PAVEMENT
NOT TO SCALE

PROPOSED PAVEMENT SCHEDULE

	MATERIAL	THICKNESS (INCHES)	TDOT GRADING
1.	AGGREGATE BASE	8	D
2.	ASPHALT BINDER	2	B or BM
3.	ASPHALT SURFACE	1.5	D or E

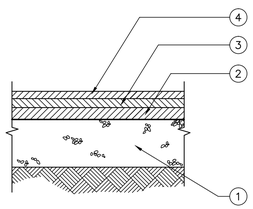

NOTES:
1. THIS PAVEMENT SECTION IS BASED ON TYPICAL AREA SOIL TYPES, SITE CONDITIONS AND LOADING. CONTRACTOR SHALL REFER TO GEOTECHNICAL STUDY FOR SITE SPECIFIC PAVEMENT RECOMMENDATIONS.
2. REFER TO "TDOT STANDARD SPECIFICATIONS AND BRIDGE CONSTRUCTION" FOR PAVING MATERIALS AND SPECIFICATIONS.

BOULEVARD PAVEMENT
NOT TO SCALE

PROPOSED PAVEMENT SCHEDULE

	MATERIAL	THICKNESS (INCHES)	TDOT GRADING
1.	AGGREGATE BASE	8	D
2.	ASPHALT BASE	3	A
3.	ASPHALT BASE	2	B or BM
4.	ASPHALT SURFACE	1.5	D or E

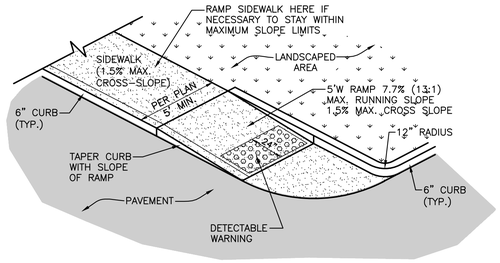

NOTES:
1. DETECTABLE WARNINGS SHALL BE WHITACRE-GREER 4"x8" ADA PAVING BRICK OR APPROVED EQUAL. COLOR SHALL CONSTRAST VISUALLY WITH ADJOINING SURFACES.
2. INSTALL DETECTABLE WARNINGS PER MANUFACTURER'S SPECIFICATIONS.
3. A VARIATION OF THE RAMP MAY BE USED IN CERTAIN CIRCUMSTANCES BUT MUST COMPLY WITH ADA SPECIFICATIONS.

HANDICAP RAMP CURBED RADIUS
NOT TO SCALE

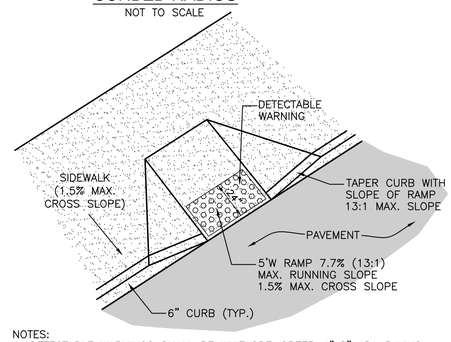

NOTES:
1. DETECTABLE WARNINGS SHALL BE WHITACRE-GREER 4"x8" ADA PAVING BRICK OR APPROVED EQUAL. COLOR SHALL CONSTRAST VISUALLY WITH ADJOINING SURFACES.
2. INSTALL DETECTABLE WARNINGS PER MANUFACTURER'S SPECIFICATIONS.
3. A VARIATION OF THE RAMP MAY BE USED IN CERTAIN CIRCUMSTANCES BUT MUST COMPLY WITH ADA SPECIFICATIONS.

PERPENDICULAR CURB RAMP WITH FLARES
NOT TO SCALE

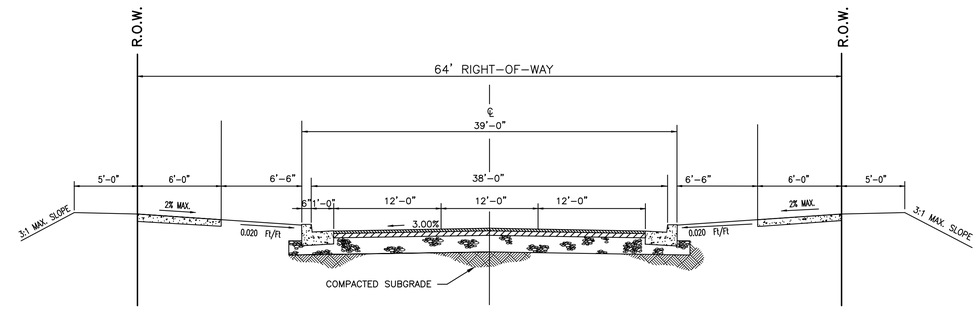

WENDLING BOULEVARD TYPICAL SECTION
(64' R.O.W.)

NOTE:
ALL PAVEMENT MARKNIGS SHALL BE THERMOPLASTIC

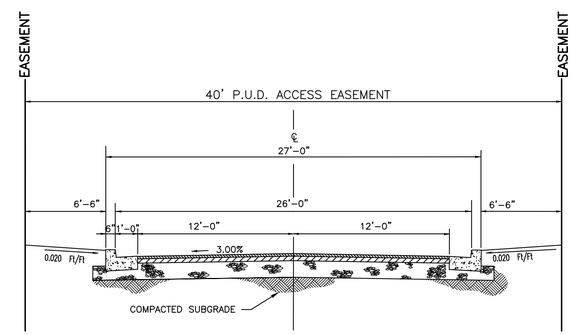

40' PUD ACCESS EASEMENT PRIVATE DRIVE TYPICAL SECTION
(40' R.O.W.)

NOTE:
ALL PAVEMENT MARKNIGS SHALL BE THERMOPLASTIC

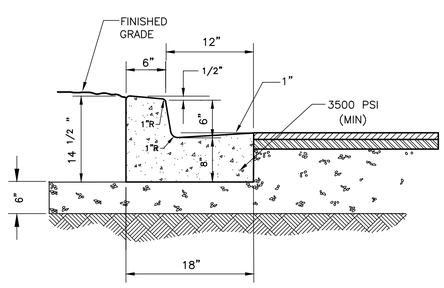

CONCRETE CURB AND GUTTER
NOT TO SCALE

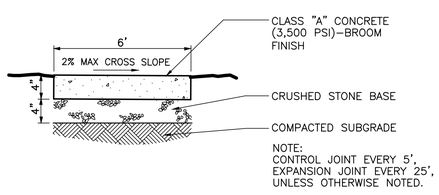

CONCRETE WALK
NOT TO SCALE

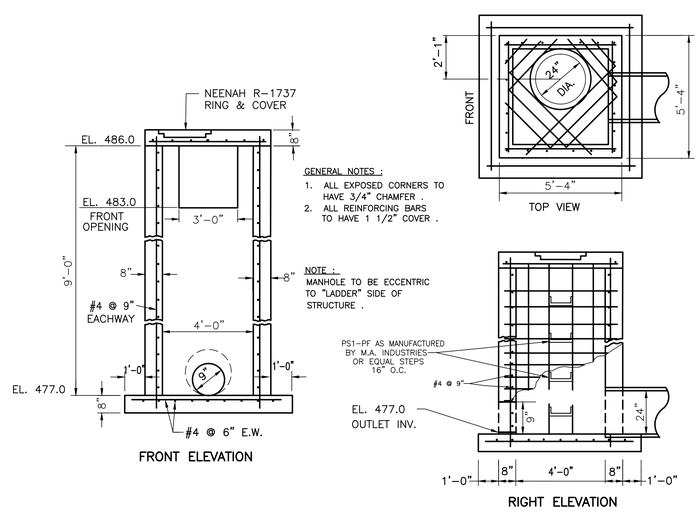

OUTLET CONTROL STRUCTURE
NOT TO SCALE

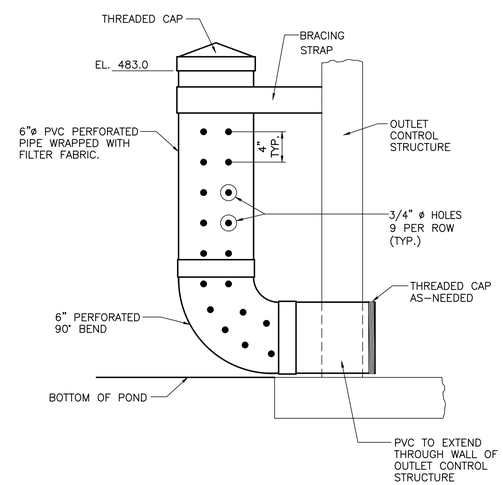

WATER QUALITY RISER DETAILS
NOT TO SCALE

RAGAN•SMITH
LAND PLANNERS • CIVIL ENGINEERS
LANDSCAPE ARCHITECTS • SURVEYORS
NASHVILLE
P.O. BOX 200070
2400 ROSA L. PARKS BLVD.
NASHVILLE, TN 37206
(615) 244-8591
CHATTANOOGA
1410 COMMERCE STREET, SUITE 200
CHATTANOOGA, TN 37405
(423) 490-9400
www.ragansmith.com

CALEB J. THORNE
REGISTERED ENGINEER
AGRICULTURE
NO. 111759
STATE OF TENNESSEE
5/9/14

HUNTER POINTE
PHASE 1, ROADWAY AND LOTS 1-3
REALTY AMERICA GROUP, LP
STATE ROUTE 386 AT LONG HOLLOW PIKE, CITY OF GALLATIN, SUMNER COUNTY, TENNESSEE

JOB NO.	WK. ORDER: 9432
DESIGNED:	W. MAGILL
DRAWN:	B. SHRUM
SCALE:	NO SCALE
DATE:	APRIL 23, 2014

REVISIONS

CIVIL DETAILS

C5.1

G:\RAGAN-NASH\CIVIL ENGINEERING_INFRASTRUCTURE PLANS_PLAN SHEETS\0432-INFRASTRUCTURE DETAILS.DWG
PLOTTED BY: BOBBY SHRUM ON: 5/9/2014 2:40 PM LAST UPDATED BY: BCS ON: 5/8/2014 10:29 AM

Spacing Between Check Dams

L = The distance such that points A and B are of equal elevation

Figure 1

Height Of Check Dams

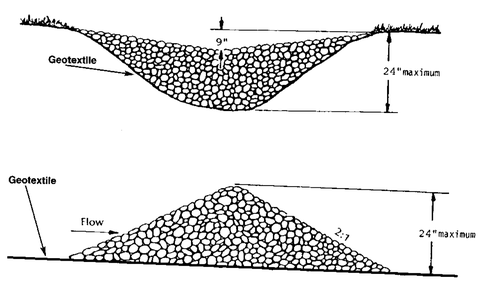

Source: GA SWCCC

Figure 2

CD - 3

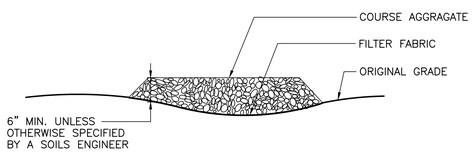

SECTION B–B

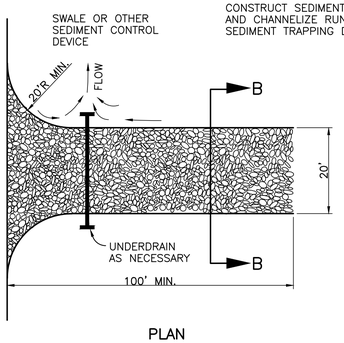

NOTE:
CONSTRUCT SEDIMENT BARRIER AND CHANNELIZE RUNOFF TO SEDIMENT TRAPPING DEVICE

PLAN

STONE CONSTRUCTION ENTRANCE

NOT TO SCALE

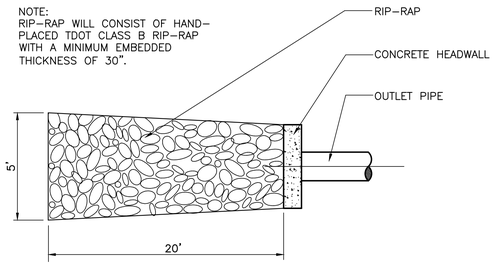

NOTE:
RIP–RAP WILL CONSIST OF HAND–PLACED TDOT CLASS B RIP–RAP WITH A MINIMUM EMBEDDED THICKNESS OF 30".

RIP-RAP DETAIL

NOT TO SCALE

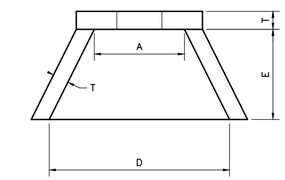

TOP VIEW

CONCRETE: 4000 PSI AT 28 DAYS REINFORCED WITH NO. 4 BARS 10" C/C/ EACH WAY WITH WINGS AND TOE SLAB DOWELLED TO HEADWALL WITH NO. 5 BARS.

3/4" CHAMFER ON ALL EXPOSED EDGES.

TABLE OF DIMENSIONS					
PIPE SIZES	A	D	E	F	(MIN.)
15"	2'–6"	5'–0"	2'–6"	1'–9"	6"
18"	2'–6"	5'–0"	2'–6"	1'–9"	6"
21"	2'–6"	5'–0"	2'–6"	1'–9"	6"
24"	4'–0"	6'–6"	3'–0"	3'–3"	6"
30"	4'–0"	6'–6"	3'–0"	3'–3"	6"
36"	5'–6"	8'–0"	3'–6"	4'–5"	6"
42"	5'–6"	8'–0"	3'–6"	4'–5"	6"
48"	5'–6"	8'–0"	3'–6"	4'–5"	6"
54"	7'–0"	9'–5"	4'–6"	5'–9"	6"
60"	7'–0"	9'–5"	4'–6"	5'–9"	6"
66"	8'–6"	11'–0"	5'–6"	6'–11"	6"
72"	8'–6"	11'–0"	5'–6"	6'–11"	6"

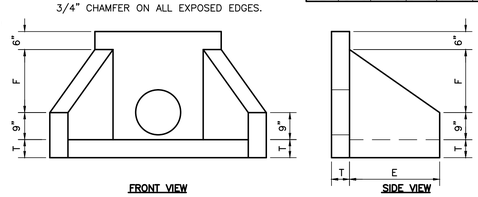

FRONT VIEW

SIDE VIEW

CONCRETE HEADWALL

NOT TO SCALE

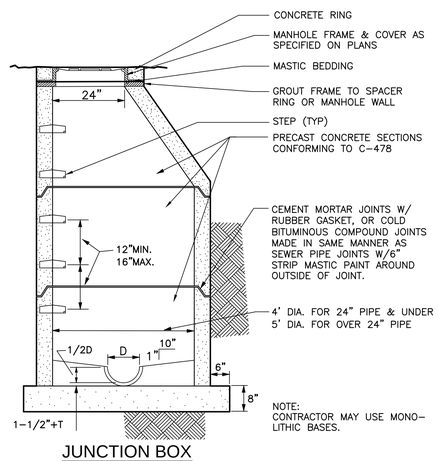

JUNCTION BOX

NOT TO SCALE

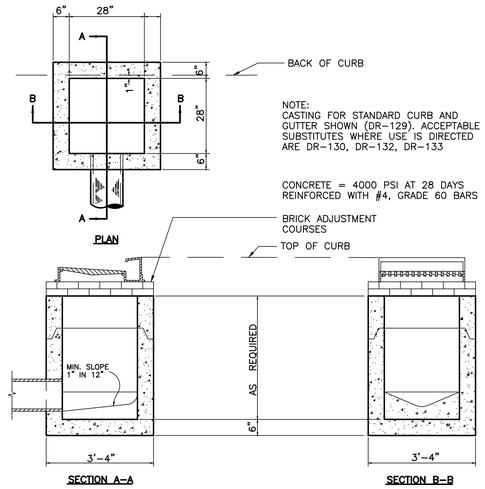

NOTE:
CASTING FOR STANDARD CURB AND GUTTER SHOWN (DR–129). ACCEPTABLE SUBSTITUTES WHERE USE IS DIRECTED ARE DR–130, DR–132, DR–133

CONCRETE = 4000 PSI AT 28 DAYS REINFORCED WITH #4, GRADE 60 BARS

SINGLE INLET (PRECAST)

NOT TO SCALE

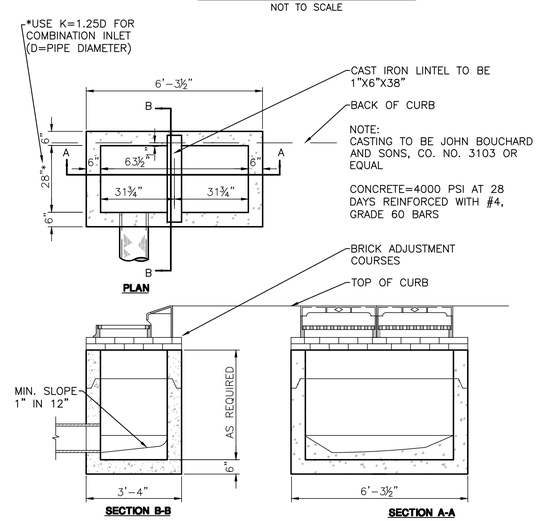

DOUBLE INLET (PRECAST) FOR EXTRUDED CURB

NOT TO SCALE

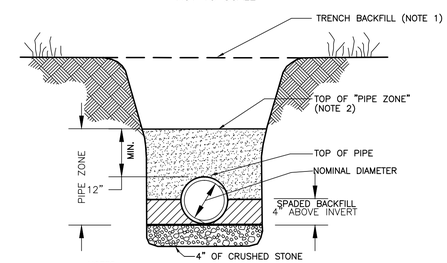

NOTES :

1. SEE STANDARD SPECIFICATIONS FOR BACKFILL REQUIREMENTS. MATERIAL SHOULD BE CAREFULLY SELECTED WITH NO ROCK LARGER THAT 6" IN LEGNTH/DIAMETER. MEANS OF COMPACTION/CONSOLIDATION OF TRENCH BACKFILL WILL BE THE RESPONSIBILITY OF THE CONTRACTOR; HOWEVER,COMPLETED TRENCH MUST MEET THE SAME REQUIREMENTS FOR COMPACTION AND CONDITIONS AS ADJACENT SUBGRADE.
2. "PIPE ZONE" EXTENDS TO 12" ABOVE TOP OF PIPE AND IS AREA IN WHICH SPECIAL CARE IS TO BE GIVEN TO PLACEMENT AND COMPACTION TO PROTECT PIPE DURING AND AFTER LAYING. MATERIAL SHOULD CONTAIN NO ROCK LARGER THAT 2" IN LEGNTH/DIAMETER.
3. LIMIT TRENCH WIDTH AT TOP OF PIPE TO NOMINAL PIPE DIAMETER PLUS 24", UNLESS PERMITTED OTHERWISE BY ENGINEER.
4. TRENCH SHALL BE DUG TO GIVE PIPE FULL AND CONTINUOUS SUPPORT. ALL ROCK TO BE REMOVED TO WITHIN 4" OF PIPE BED TO PIPE GRADE WITH CRUSHED STONE BEDDING. BEDDING FROM PIPE INVERT + 4" TO BE SPADED CRUSHED STONE
5. PIPE IS TO BE CONTINUOUSLY SUPPORTED ALONG LENGTH OF PIPE BARREL EXCEPT AT BELLS. BELL HOLES ARE SUCH THAT NO BEARING LOAD IS TAKEN BY THE BELL.

STORM LINE INSTALLATION

NOT TO SCALE

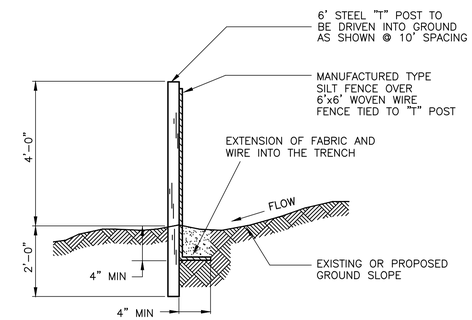

TO BE INSTALLED AS NOTED ON PLAN BEFORE COMMENCING GRADING OPERATION AND LEFT IN PLACE UNTIL A GOOD STAND OF GRASS IS ESTABLISHED OVER ALL DISTURBED AREAS.

EROSION/SILTATION FENCE

NOT TO SCALE

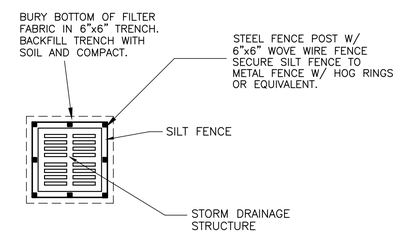

INLET PROTECTION W/FABRIC FENCE

NOT TO SCALE

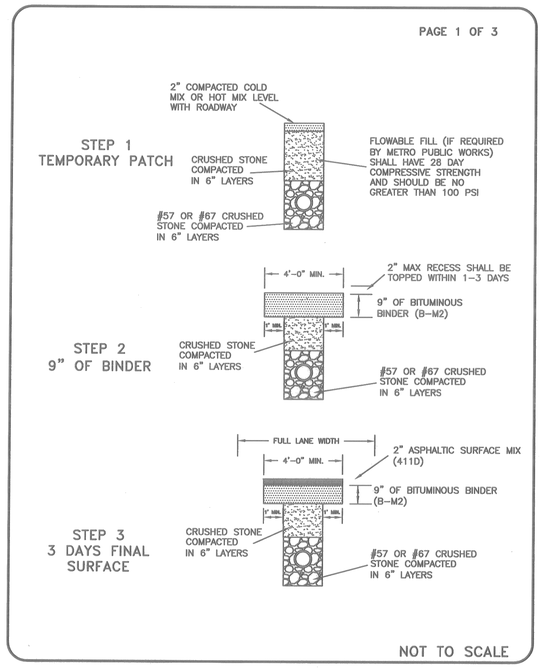

TYPICAL UTILITY INSTALLATION IN PAVEMENT

NOT TO SCALE

RAGAN•SMITH
LAND PLANNERS • CIVIL ENGINEERS
LANDSCAPE ARCHITECTS • SURVEYORS
NASHVILLE
P.O. BOX 200070
2400 ROSA PARKS BLVD.
NASHVILLE, TN. 37206
(615) 244-8591
CHATTANOOGA
1410 COWART STREET, SUITE 200
CHATTANOOGA, TN 37408
(423) 490-9400
• www.ragansmith.com •

CALEB J. THORNE
REGISTERED PROFESSIONAL ENGINEER
AGRICULTURE
NO. 111759
STATE OF TENNESSEE
5/9/14

HUNTER POINTE
PHASE 1, ROADWAY AND LOTS 1-3
REALTY AMERICA GROUP, LP
STATE ROUTE 386 AT LONG HOLLOW PIKE, CITY OF GALLATIN, SUMNER COUNTY, TENNESSEE

JOB NO.	05149
WK. ORDER	9432
DESIGNED:	W. MAGILL
DRAWN:	B. SHRUM
SCALE:	NO SCALE
DATE:	APRIL 23, 2014
REVISIONS	

CIVIL DETAILS

C5.2

G:\05149-NASH\CIVIL ENGINEERING\C_DRW\ASTRUCTURE PLANS_PLANS_PLANS\TWEETSHEET\INFRASTRUCTURE DETAILS.DWG
PLOTTED BY: BOBBY SHRUM ON: 5/9/2014 2:43 PM LAST UPDATED BY: BCS ON: 5/8/2014 10:29 AM

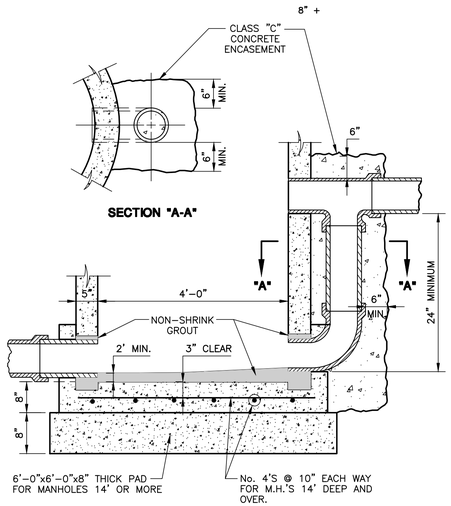

NOTE:
DROP PIPE DIAMETER TO BE SAME AS INCOMING LINE IN.

STANDARD DROP STRUCTURE

NOT TO SCALE

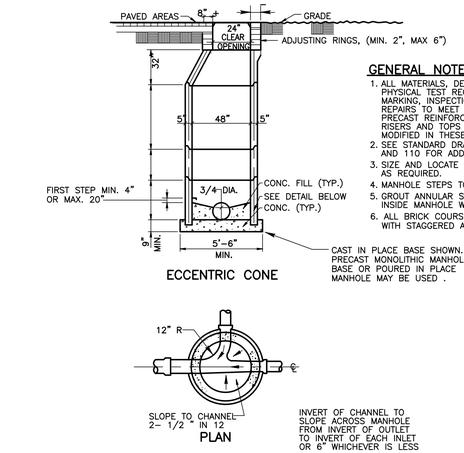

GENERAL NOTES:

1. ALL MATERIALS, DESIGN, MANUFACTURE, PHYSICAL TEST REQUIREMENTS, FINISH, MARKING, INSPECTION, REJECTION AND REPAIRS TO MEET ASTM C478 FOR PRECAST REINFORCED CONCRETE MANHOLE RISERS AND TOPS EXCEPT AS MAY BE MODIFIED IN THESE SPECIFICATIONS.
2. SEE STANDARD DRAWINGS 106, 108,109, AND 110 FOR ADDITIONAL DETAILS.
3. SIZE AND LOCATE PIPE CUTOUTS AS REQUIRED.
4. MANHOLE STEPS TO BE CAST IN PLACE.
5. GROUT ANNULAR SPACE AROUND PIPE INSIDE MANHOLE WITH NON-SHRINK GROUT.
6. ALL BRICK COURSES TO BE LAYED RADIAL WITH STAGGERED ALIGNMENT .

STANDARD PRECAST CONCRETE MANHOLES

N.T.S.

WATER AND SEWER NOTES

1. WATER LINES FOR DOMESTIC AND FIRE SERVICE USE TO THE BUILDING(S) SHALL BE INSTALLED IN ACCORDANCE WITH APPLICABLE GALLATIN PUBLIC UTILITIES REQUIREMENTS AND SPECIFICATIONS.
2. WATER LINE SERVICE TO BUILDING SHALL BE EXTENDED FROM THE EXISTING MAIN TO A POINT 5 FEET OUTSIDE BUILDINGS WHERE THE SITE UTILITY CONTRACTOR SHALL BE RESPONSIBLE FOR CONNECTION TO BUILDING PLUMBING SYSTEM.
3. THE SANITARY SEWER SERVICE LINE, SHOWN BY THIS PLAN, SHALL BE INSTALLED IN ACCORDANCE WITH APPLICABLE GALLATIN PUBLIC UTILITIES REQUIREMENTS AND SPECIFICATIONS.
4. SANITARY SEWER SERVICE TO BUILDING SHALL BE EXTENDED FROM THE EXISTING MAIN TO A POINT 5 FEET OUTSIDE BUILDINGS WHERE THE SITE UTILITY CONTRACTOR SHALL BE RESPONSIBLE FOR CONNECTION TO BUILDING PLUMBING SYSTEM.

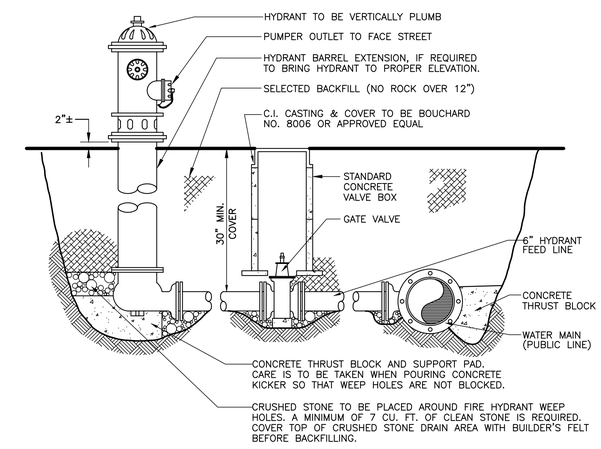

FIRE HYDRANT ASSEMBLY

NOT TO SCALE

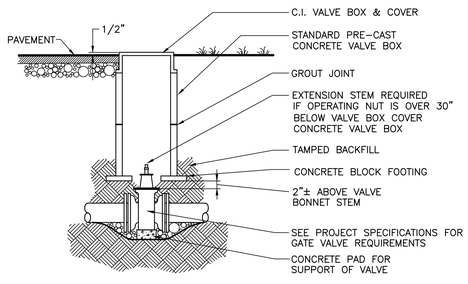

GATE VALVE

NOT TO SCALE

NOTES :

1. SEE STANDARD SPECIFICATIONS FOR BACKFILL REQUIREMENTS.
2. "PIPE ZONE" EXTENDS TO 12" ABOVE TOP OF PIPE AND IS AREA IN WHICH SPECIAL CARE IS TO BE GIVEN TO PLACEMENT AND COMPACTION TO PROTECT PIPE DURING AND AFTER LAYING.
3. LIMIT TRENCH WIDTH AT TOP OF PIPE TO NOMINAL PIPE DIAMETER PLUS 24", UNLESS PERMITTED OTHERWISE BY ENGINEER.
4. TRENCH SHALL BE DUG TO GIVE PIPE FULL AND CONTINUOUS SUPPORT. ALL ROCK TO BE REMOVED TO WITHIN 6" OF PIPE BED TO PIPE GRADE WITH CRUSHED STONE BEDDING. BEDDING FROM PIPE GRADE TO 1/2 PIPE DIAMETER TO BE TAMPED EARTH, CRUSHED STONE OR OTHER MATERIAL (APPROVED).
5. PIPE IS TO BE CONTINUOUSLY SUPPORTED ALONG LENGTH OF PIPE BARREL EXCEPT AT BELLS. BELL HOLES ARE SUCH THAT NO BEARING LOAD IS TAKEN BY THE BELL.

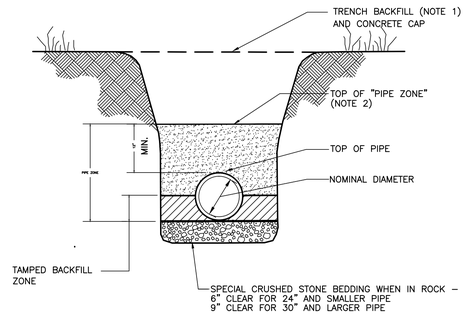

WATER LINE INSTALLATION
FLAT BOTTOM TRENCH-TAMPED BACKFILL

NOT TO SCALE

NOTES :

1. BACKFILL MATERIAL SHALL CONSIST OF CRUSHED STONE (#57 OR #67).
2. "PIPE ZONE" EXTENDS TO 12" ABOVE TOP OF PIPE. BACKFILL IS TO BE CRUSHED STONE, GRAVEL OR OTHER GRANULAR MATERIAL.
3. LIMIT TRENCH WIDTH AT TOP OF PIPE ZONE TO O.D. + 16" UNLESS PERMITTED OTHERWISE BY ENGINEER.
4. PIPE BEDDING IS TO BE CRUSHED STONE, GRAVEL OR GRANULAR MATERIAL AS APPROVED BY ENGINEER. DEPTH UNDER BOTTOM OF PIPE IS TO BE 1/8 O.D. OF PIPE OR 4", WHICHEVER IS GREATER. *
5. PIPE IS TO BE CONTINUOUSLY SUPPORTED ALONG LENGTH OF PIPE BARREL EXCEPT AT BELLS. BELL HOLES ARE SUCH THAT NO BEARING LOAD IS TAKEN BY THE BELL.
6. TRAFFIC SURFACE IS TO MATCH EXISTING CONDITIONS OR PROPOSED TYPICAL HEAVY OR LIGHT DUTY PAVEMENT PER DETAILS.

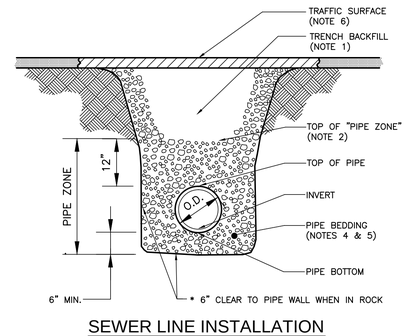

SEWER LINE INSTALLATION IN TRAFFIC AREAS

NOT TO SCALE

NOTES :

1. BACKFILL MATERIAL SHALL CONSIST OF EXCAVATED MATERIAL AND MAY HAVE A BROKEN STONE CONTENT OF 3/4 BY VOLUME WITH SUFFICIENT EARTH MATERIAL TO FILL ALL VOIDS. STONES SHALL NOT EXCEED 6" IN THEIR MAXIMUM DIMENSION.
2. "PIPE ZONE" EXTENDS TO 12" ABOVE TOP OF PIPE. BACKFILL IS TO BE CRUSHED STONE, GRAVEL OR OTHER GRANULAR MATERIAL.
3. LIMIT TRENCH WIDTH AT TOP OF PIPE ZONE TO O.D. + 16" UNLESS PERMITTED OTHERWISE BY ENGINEER.
4. PIPE BEDDING IS TO BE CRUSHED STONE, GRAVEL OR GRANULAR MATERIAL AS APPROVED BY ENGINEER. DEPTH UNDER BOTTOM OF PIPE IS TO BE 1/8 O.D. OF PIPE OR 4", WHICHEVER IS GREATER. *
5. PIPE IS TO BE CONTINUOUSLY SUPPORTED ALONG LENGTH OF PIPE BARREL EXCEPT AT BELLS. BELL HOLES ARE SUCH THAT NO BEARING LOAD IS TAKEN BY THE BELL.

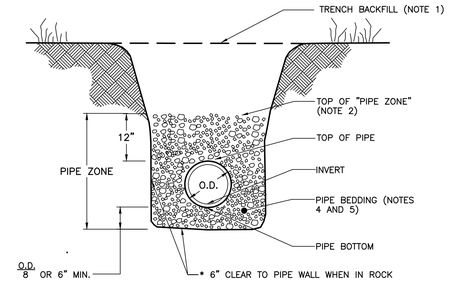

TYPICAL SEWER INSTALLATION

NOT TO SCALE

RAGAN•SMITH
LAND PLANNERS • CIVIL ENGINEERS
LANDSCAPE ARCHITECTS • SURVEYORS
NASHVILLE
P.O. BOX 60070
NASHVILLE, TN. 37206
(615) 244-8591
CHATTANOOGA
1410 CONVENTION STREET, SUITE 200
CHATTANOOGA, TN. 37405
(423) 490-9400
• www.ragansmith.com •

CALEB J. THORNE
REGISTERED PROFESSIONAL ENGINEER
AGRICULTURE
No. 111759
STATE OF TENNESSEE
3/21/14

HUNTER POINTE

PHASE 1, ROADWAY AND LOTS 1-3

REALTY AMERICA GROUP, LP

STATE ROUTE 386 AT LONG HOLLOW PIKE, CITY OF GALLATIN, SUMMER COUNTY, TENNESSEE

JOB NO.	05149
WK. ORDER	9432
DESIGNED:	W. MAGILL
DRAWN:	B. SHRUM
SCALE:	NO SCALE
DATE:	APRIL 23, 2014
REVISIONS	

CIVIL DETAILS

C5.3

G:\SURVEY\NASHVILLE\ENGINEERING_INFRASTRUCTURE PLANS_PLAN SHEETS\RAGAN INFRASTRUCTURE DETAILS.DWG
PLOTTED BY: BOBBY SHRUM ON: 3/25/2014 2:43 PM LAST UPDATED BY: BCS ON: 3/25/2014 10:55 AM

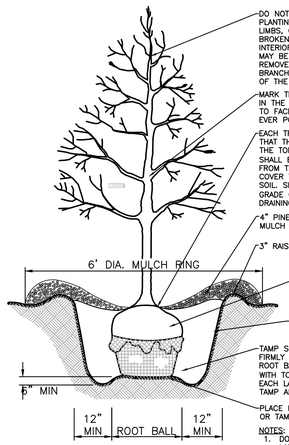

NOTES:
1. DO NOT STAKE TREES UNLESS APPROVED BY THE LANDSCAPE ARCHITECT. IF STAKED, REMOVE AFTER ONE GROWING SEASON.
2. DO NOT WRAP TREE TRUNKS UNLESS APPROVED BY THE LANDSCAPE ARCHITECT. REMOVE WRAP AFTER PLANTING.
3. NON-BIODEGRADABLE BURLAP TO BE REMOVED OR ROLLED UNDER ROOT BALL AFTER PLANT IS PLACED IN HOLE.

TREE PLANTING

NOT TO SCALE

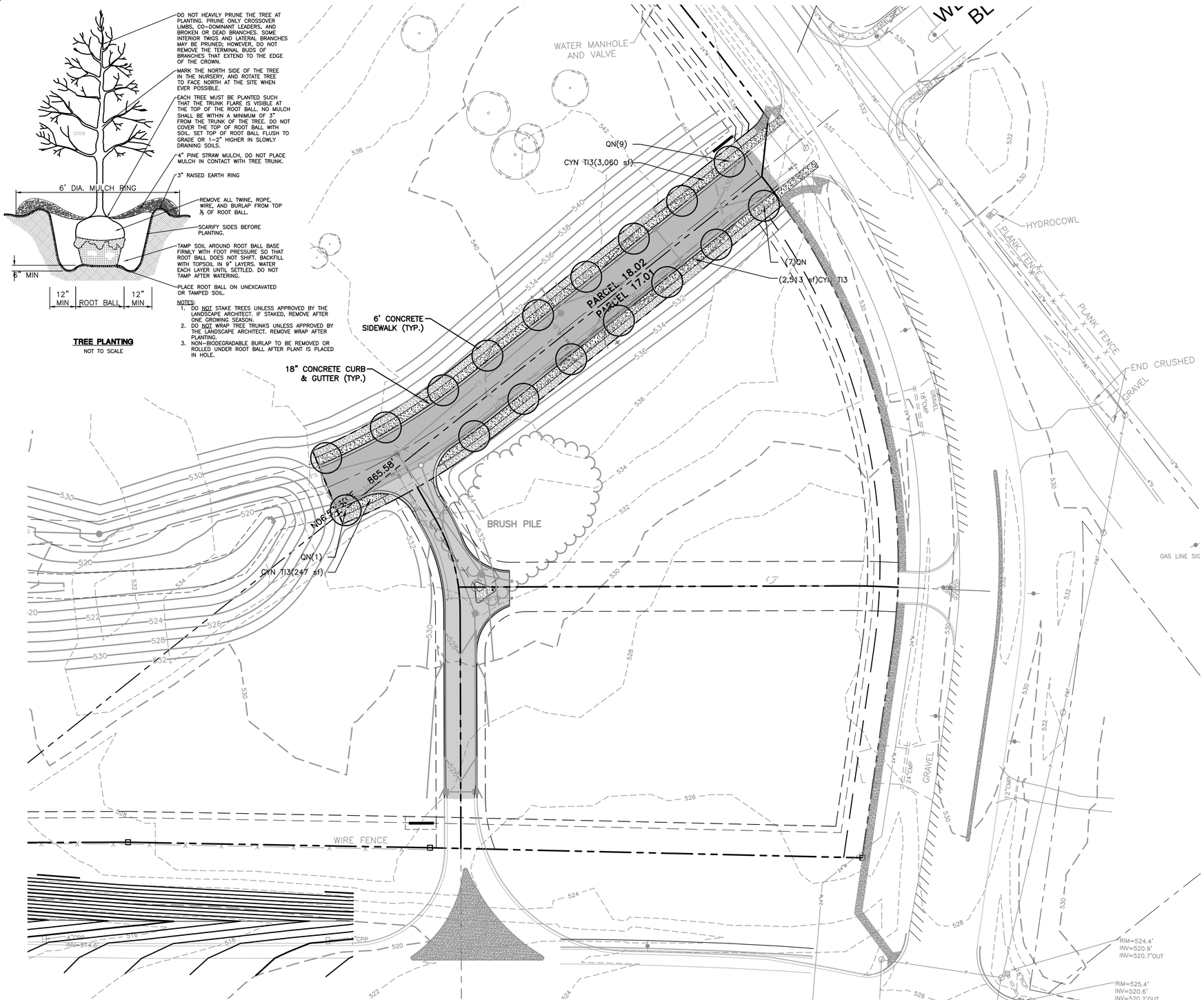

PLANTING NOTES

1. ANY SERIES OF TREES TO BE PLACED IN A PARTICULAR ARRANGEMENT WILL BE FIELD CHECKED FOR ACCURACY. ANY PLANTS MISARRANGED WILL BE RELOCATED.
2. SOIL USED IN BACKFILLING PLANTING PITS SHALL BE TOPSOIL AND MIXED WITH 25% PEAT BY VOLUME. EXCEPT FOR ERICACEOUS PLANTS, VERY ACID OR SOUR SOIL (SOIL HAVING A pH less than 6) SHALL BE MIXED WITH SUFFICIENT LIME TO PRODUCE A SLIGHTLY ACID REACTION (A pH of 6.0 to 6.5). ADD 10-10-10 COMMERCIAL FERTILIZER AT THE RATE OF 2 POUNDS PER CUBIC YARD. MIX BOTH FERTILIZER AND PEAT THOROUGHLY BY HAND OR ROTARY TILLER.
3. SOIL USED IN BACKFILLING ERICACEOUS PLANTS SHALL BE TOPSOIL MIXED WITH 50% PEAT BY VOLUME. ADD 5-10-5 COMMERCIAL FERTILIZER AT THE RATE OF 5 POUNDS PER CUBIC YARD. MIX BOTH FERTILIZER AND PEAT THOROUGHLY BY HAND OR ROTARY TILLER.
4. UPON SECURING PLANT MATERIAL AND BEFORE INSTALLATION, THE CONTRACTOR SHALL NOTIFY THE LANDSCAPE ARCHITECT OR OWNER'S REPRESENTATIVE FOR A PRE-INSTALLATION INSPECTION TO VERIFY ALL PLANT MATERIAL MEETS SPECIFICATION. MATCH TREES OF SAME SPECIES IN GROWTH CHARACTER AND UNIFORMITY.
5. APPLY HERBICIDE (TREFLAN OR EQUIVALENT) TO ALL PLANT BEDS PRIOR TO PLANTING FOR NOXIOUS WEED CONTROL AT A RATE OF 2 POUNDS PER 1,000 SQUARE FEET.
6. CONTRACTOR SHALL SUBMIT A 10 OUNCE SAMPLE OF THE TOPSOIL PROPOSED TO A TESTING LABORATORY FOR ANALYSIS. SUBMIT TEST RESULTS WITH RECOMMENDATIONS FOR SUITABILITY TO THE OWNER'S REPRESENTATIVE FOR APPROVAL.
7. PLANTS SHALL BE ORIENTED FOR BEST APPEARANCE AND VERTICAL. ALL NON-BIODEGRADABLE ROOT CONTAINERS SHALL BE REMOVED.
8. SELECTIVELY TRIM TREE BRANCHES BY 25%, MAINTAINING NATURAL SHAPE. PRUNE ALL DEAD AND BROKEN BRANCHES IN TREES AND SHRUBS. REMOVE TAGS, TWINE OR OTHER NON-BIODEGRADABLE MATERIAL.
9. SCARIFY SUBSOIL IN PLANTING BEDS TO A DEPTH OF 3 INCHES. ALL PLANTING BEDS SHALL RECEIVE A MINIMUM OF 6 INCHES OF TOPSOIL.
10. CONTRACTOR SHALL PROVIDE SMOOTH, NEATLY TRENCHED (3 INCH DEEP) BED EDGES.
11. ALL PLANTING BEDS TO HAVE A MINIMUM 4 INCH DEEP PINE BARK MULCH, PINE STRAW MULCH OR OTHER MULCH AS SPECIFIED.
12. DIMENSIONS FOR TRUNK CALIPER, HEIGHTS, AND SPREAD SPECIFIED ON THE MATERIAL SCHEDULE ARE A GENERAL GUIDE FOR THE MINIMUM REQUIRED SIZE OF EACH PLANT. QUALITY AND SIZE OF PLANTS, SPREAD OF ROOTS AND SIZE OF BALLS SHALL BE IN ACCORDANCE WITH A.N.S.I. Z80 "AMERICAN STANDARD FOR NURSERY STOCK" (CURRENT EDITION) AS PUBLISHED BY THE AMERICAN ASSOCIATION OF NURSERYMEN, INC.
13. THE QUANTITIES INDICATED ON THE MATERIAL SCHEDULE ARE PROVIDED FOR THE BENEFIT OF THE CONTRACTOR, BUT SHOULD NOT BE ASSUMED TO ALWAYS BE CORRECT. IN THE EVENT OF A DISCREPANCY, THE PLANTING PLAN (PLANT SYMBOLS) WILL TAKE PRECEDENCE OVER THE MATERIAL SCHEDULE. THE CONTRACTOR SHALL BE RESPONSIBLE FOR HIS/HER OWN QUANTITY CALCULATIONS AND THE LIABILITY PERTAINING TO THOSE QUANTITIES AND ANY RELATED CONTRACT DOCUMENTS AND/OR PRICE QUOTATIONS.
14. CONTRACTOR TO WARRANTY ALL MATERIAL FOR ONE YEAR AFTER DATE OF FINAL ACCEPTANCE.
15. COMBUSTIBLE MULCH SHALL NOT BE APPLIED OR MAINTAINED WITHIN TWO FEET OF ANY BUILDING AROUND ENTIRE EXTERIOR PERIMETER, EXCEPT ONE AND TWO FAMILY DWELLINGS, BUILDINGS WITH EXTERIOR WALLS AND EXTERIOR WALL COVERINGS CONSTRUCTED OF NONCOMBUSTIBLE MATERIALS.

SODDING NOTES

1. AREAS INDICATED FOR SOD SHALL BE 419 BERMUDA. MINIMUM AGE SHALL BE 18 MONTHS, WITH ROOT DEVELOPMENT THAT WILL SUPPORT ITS OWN WEIGHT WITHOUT TEARING WHEN SUSPENDED VERTICALLY BY HOLDING THE UPPER TWO CORNERS.
2. SUBMIT SOD CERTIFICATION FOR GRASS SPECIES AND LOCATION OF SOD SOURCE. INCLUDE CERTIFICATION THAT SOD IS FREE OF DISEASE, NEMATODES, UNDESIRABLE INSECTS, AND QUARANTINE RESTRICTIONS.
3. SOD SHALL BE DELIVERED ON PALLETS. STORE SOD AT A LOCATION PROTECTED FROM DAMAGING WINDS.
4. APPLY 6-12-12 COMMERCIAL TYPE FERTILIZER, WITH 50% OF THE ELEMENT DERIVED FROM ORGANIC SOURCES AT A RATE RECOMMENDED BY THE MANUFACTURER. APPLY AFTER SMOOTH RAKING OF TOPSOIL AND NO MORE THAN 48 HOURS BEFORE LAYING SOD. MIX THOROUGHLY IN THE UPPER 2 INCHES OF TOPSOIL AND LIGHTLY WATER TO AID BREAKDOWN.
5. LIGHTLY MOISTEN AREA TO RECEIVE SOD IMMEDIATELY PRIOR TO LAYING SOD.
6. LAY SOD TIGHTLY WITH NO OPEN JOINTS VISIBLE AND NOT OVERLAPPING. STAGGER END JOINTS A MINIMUM OF 12 INCHES AND DO NOT STRETCH SOD PIECES.
7. ON SLOPES 6 INCHES PER FOOT AND STEEPER, LAY SOD PERPENDICULAR TO SLOPE AND SECURE EVERY ROW WITH WOODEN PEGS AT AN MAXIMUM 2 FEET O.C. DRIVE PEGS FLUSH WITH SOD PORTION OF SOD.
8. PRIOR TO PLACING SOD ON SLOPES OF 8 INCHES PER FOOT AND STEEPER, PLACE JUTE EROSION CONTROL MESH OVER TOPSOIL. SECURELY ANCHOR IN PLACE WITH PEGS SUNK FIRMLY INTO THE GROUND. CONTRACTOR SHALL SUBMIT 12" X 12" SAMPLES OF JUTE MESH FOR REVIEW TO LANDSCAPE ARCHITECT OR OWNER'S REPRESENTATIVE PRIOR TO INSTALLATION.
9. IMMEDIATELY AFTER INSTALLATION, WATER SODDED AREAS TO A DEPTH OF 4 INCHES.
10. AFTER SOD AND SOIL HAVE DRIED, ROLL SODDED AREAS TO ENSURE A GOOD BOND BETWEEN SOIL AND SOD. ROLLER SHALL NOT EXCEED 150 POUNDS.
11. CONTRACTOR SHALL BE RESPONSIBLE FOR MAINTAINING (MOWING, TRIMMING, WATERING) THE SOD UNTIL THE INSTALLATION IS INSPECTED AND ACCEPTED BY THE OWNER'S REPRESENTATIVE.
12. THE CONTRACTOR SHALL REPLACE SOD AREAS THAT SHOW DETERIORATION FOR A PERIOD OF ONE YEAR AFTER ACCEPTANCE OF THE INSTALLATION. REPLACE DETERIORATED MATERIAL WITH SOD OF EQUAL QUALITY ORIGINALLY SPECIFIED.

PLANT SCHEDULE

TREES	QTY	BOTANICAL NAME / COMMON NAME	TYPE	SIZE	HEIGHT	SPACING	REMARKS
QN	17	QUERCUS NUTTALLII / NUTTALL OAK	DECIDUOUS	2.5" CAL.	12-14' HT	AS SHOWN	
GROUND COVERS	QTY	BOTANICAL NAME / COMMON NAME	CONT	TYPE	SPREAD	SPACING	REMARKS
CYN TI3	5,819 SF	CYNODON DACTYLON 'TIF 419' / BERMUDA GRASS	SOD	DECIDIOUS	--		

IF YOU DIG TENNESSEE...
CALL US FIRST!
811
TENNESSEE ONE CALL
IT'S THE LAW

0 40 80 120

RAGAN•SMITH
LAND PLANNERS • CIVIL ENGINEERS
LANDSCAPE ARCHITECTS • SURVEYORS
NASHVILLE
P.O. BOX 90203
2400 ROSA L. PARKS BLVD.
NASHVILLE, TN. 37206
(615) 244-8591
CHATTANOOGA
1416 CONVENTION CENTER RD.
SUITE 203
CHATTANOOGA, TN. 37405
(423) 490-9400
• www.ragansmith.com •

SCOTT MICHAEL BERNICK
REGISTERED
No. 337
TENNESSEE
LANDSCAPE ARCHITECT

HUNTER POINTE
PHASE 1, ROADWAY AND LOTS 1-3
REALTY AMERICA GROUP, LP
STATE ROUTE 386 AT LONG HOLLOW PIKE, CITY OF GALLATIN, SUMNER COUNTY, TENNESSEE

JOB NO.	05149
WK. ORDER	9432
DESIGNED:	S. BERNICK
DRAWN:	S. BERNICK
SCALE:	1" = 40'
DATE:	APRIL 23, 2014
REVISIONS	

SITE LANDSCAPE PLAN, NOTES AND DETAILS

L1.1

G:\05149\9432\CIVIL ENGINEERING_INFRASTRUCTURE PLANS_PLAN SHEETS\9432-INFRASTRUCTURE LANDSCAPE.DWG
PLOTTED BY: ROBERT SARNA ON: 5/6/2014 3:40 PM LAST UPDATED BY: BCS ON: 5/6/2014 11:00 AM

GENERAL NOTES

1. THE PURPOSE OF THIS PLAT IS TO CREATE 3 COMMERCIAL LOTS AND DEDICATE RIGHT-OF-WAY AND EASEMENTS.
2. BEARINGS SHOWN HEREON ARE BASED ON THE TENNESSEE COORDINATE SYSTEM OF 1983. GPS EQUIPMENT WAS USED TO DETERMINE THE POSITION OF CONTROL POINTS ON THE SURVEYED PROPERTY TO ESTABLISH THE BEARING BASE FOR THE SURVEY. TYPE OF EQUIPMENT USED: LEICA, MODEL GX1230, DUAL FREQUENCY RECEIVER. THE TYPE OF GPS SURVEY: NETWORK ADJUSTED REAL TIME KINEMATIC.
3. ELEVATIONS SHOWN HEREON ARE BASED ON NAVD 88. CONTOURS ARE AT TWO FOOT INTERVALS AND ARE BASED ON A FIELD RUN SURVEY USING RANDOM SPOT ELEVATIONS. CONTOURS WERE DERIVED USING SURFACE MODELING TECHNIQUES.
4. BY SCALED MAP LOCATION AND GRAPHIC PLOTTING ONLY, THIS PROPERTY LIES WITHIN FLOOD ZONE "X", AS DESIGNATED ON CURRENT FEDERAL EMERGENCY MANAGEMENT AGENCY MAP NO. 47165C0313G, WITH AN EFFECTIVE DATE OF APRIL 17, 2012, WHICH MAKES UP A PART OF THE NATIONAL FLOOD INSURANCE ADMINISTRATION REPORT; COMMUNITY NO. 470185, PANEL NO. 313, SUFFIX G, WHICH IS THE CURRENT FLOOD INSURANCE RATE MAP FOR THE COMMUNITY IN WHICH SAID PREMISES IS SITUATED. SAID MAP DEFINES ZONE "X" UNDER "OTHER AREAS" AS AREAS DETERMINED TO BE OUTSIDE THE 0.2% ANNUAL CHANCE FLOODPLAIN.

LEGEND

- CM(O) — CONCRETE MONUMENT (OLD)
- MONUMENT (NEW) (4" DIAMETER ALUMINUM DISC W/ 5/8" IRON ROD MARKED "RAGAN-SMITH ASSOCIATES")
- IR(O) — IRON ROD (OLD)
- IRON ROD (NEW) (5/8" X 18" W/CAP STAMPED "RAGAN SMITH & ASSOCIATES")
- FIRE HYDRANT
- WATER VALVE
- CATCH BASIN
- SANITARY SEWER MANHOLE
- UTILITY POLE
- UTILITY POLE W/ ANCHOR
- UTILITY POLE W/ LIGHT
- GAS VALVE
- *DECIDUOUS TREE*
- *EVERGREEN TREE*
- —P— OVERHEAD ELECTRIC POWER LINE
- —P&T— OVERHEAD POWER AND TELEPHONE LINES
- —SA— SANITARY SEWER LINE
- —G— GAS LINE
- —W— WATER LINE
- —X—X— FENCE
- INV INVERT
- ELEV ELEVATION
- RCP REINFORCED CONCRETE PIPE
- CMP CORRUGATED METAL PIPE
- CPP CORRUGATED PLASTIC PIPE
- ST PROPOSED STORM PIPE
- M.B.S.L. MINIMUM BUILDING SETBACK LINE
- R.O.S.C. REGISTER'S OFFICE FOR SUMNER COUNTY

SITE DATA TABLE

TITLE OF SUBDIVISION:	HUNTER POINTE
PROPERTY OWNER:	REALTY AMERICA GROUP, LP ATTN: KIP SOWDEN 4245 NORTH CENTRAL EXPRESSWAY, SUITE 420 DALLAS, TX 75206 (214) 522-3300 KIP@RREAF.COM
PROPERTY LOCATION:	NORTHEAST CORNER OF HIGHWAY 386 AND LONG HOLLOW PIKE
TAX MAP INFO:	MAP 125, PARCELS 17.01, 18.02, AND 18.03
PREPARED BY:	RAGAN-SMITH, INC. ATTN: CHRISTOPHER J. MABERY, RLS 315 WOODLAND STREET NASHVILLE, TN 37206 (615) 244-8591 CMABERY@RAGANSMITH.COM
DATE:	APRIL 23, 2014
ZONING/SETBACK INFO:	MU – (MIXED USE). MINIMUM YARD REQUIREMENTS PER PRELIMINARY MASTER DEVELOPMENT PLAN, DATED OCTOBER 2, 2008, REVISED APRIL 23, 2014, ARE AS FOLLOWS: FRONT: 50% OF REQUIRED SETBACK (50' REQUIRED FOR ARTERIAL) SIDE: 10' REAR: 40' (REAR ABUTTING RESIDENTIAL DISTRICT) REAR: 20' (REAR ABUTTING COMMERCIAL DISTRICT) MAXIMUM BUILDING HEIGHT – 35' (MAY BE INCREASED BY 1' PER 1' INCREASE OF SETBACK)

DEED REFERENCE

PARCELS 17.01 AND 18.02

BEING THE SAME PROPERTY CONVEYED TO GALLATIN LAND, LLC FROM JOHN THOMAS MCKNIGHT, INDIVIDUALLY, AND d/b/a SAFE DEVELOPMENT COMPANY AND JOHN THOMAS MCKNIGHT AS TRUSTEE OF THE JOHN THOMAS MCKNIGHT 2005 REVOCABLE TRUST BY GENERAL WARRANTY DEED OF RECORD IN RECORD BOOK 3512, PAGE 1, REGISTER'S OFFICE FOR SUMNER COUNTY, TENNESSEE.

PARCEL 18.03

BEING THE SAME PROPERTY CONVEYED TO HUNTER POINTE, LLC FROM JOHN N. GRIFFIN, JR. BY WARRANTY DEED OF RECORD IN RECORD BOOK 2675, PAGE 413, REGISTER'S OFFICE FOR SUMNER COUNTY, TENNESSEE.

LINE TABLE		
LINE	BEARING	DISTANCE
L1	S48°00'34"W	14.33'
L2	N74°09'11"W	30.43'

CURVE TABLE						
CURVE	RADIUS	LENGTH	DELTA	TANGENT	CHORD	CHD BRG
C1	532.00'	151.41'	16°18'23"	76.22	150.90'	S14°57'05"W
C2	532.00'	84.02'	9°02'56"	42.10	83.93'	N11°19'21"E
C3	532.00'	67.39'	7°15'27"	33.74	67.34'	N19°28'32"E
C4	468.00'	133.19'	16°18'23"	67.05	132.74'	N14°57'05"E
C5	3774.71'	1.81'	0°01'39"	0.91	1.81'	S81°08'54"E
C6	497.96'	19.54'	2°14'56"	9.77	19.54'	S81°18'06"E
C7	497.96'	329.79'	37°56'45"	171.20	323.80'	S61°12'16"E
C8	497.96'	49.30'	5°40'19"	24.67	49.28'	S39°23'43"E
C9	500.00'	23.36'	2°40'38"	11.68	23.36'	S46°40'15"W
C10	150.00'	77.19'	29°29'07"	39.47	76.34'	N59°24'37"W
C11	150.00'	57.72'	22°02'49"	29.22	57.36'	N63°07'47"W
C12	150.00'	19.47'	7°26'19"	9.75	19.46'	N48°23'13"W
C13	118.00'	42.62'	20°41'44"	21.55	42.39'	N55°00'56"W

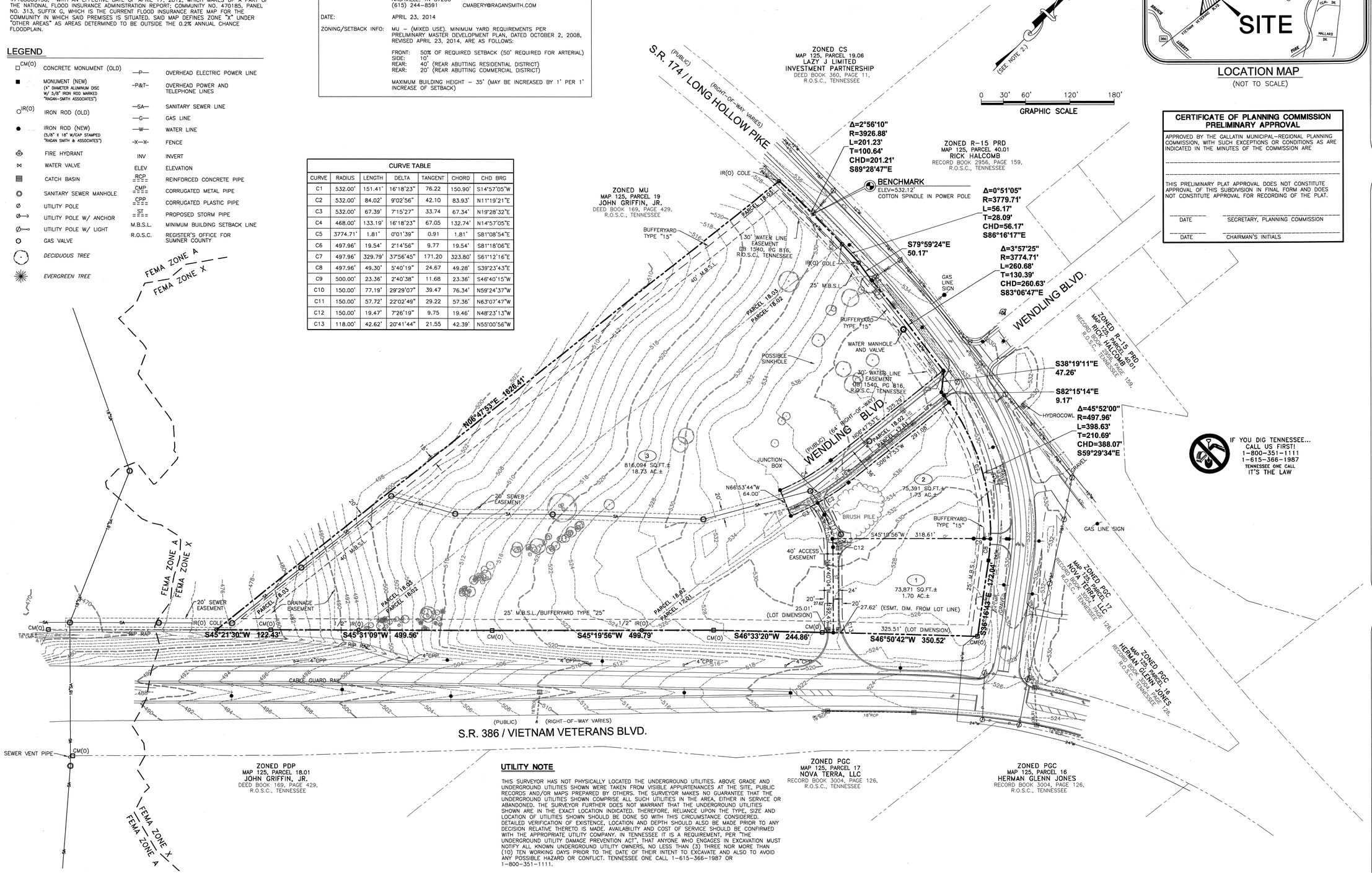

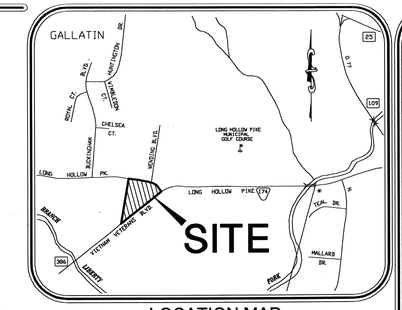

LOCATION MAP
(NOT TO SCALE)

CERTIFICATE OF PLANNING COMMISSION PRELIMINARY APPROVAL

APPROVED BY THE GALLATIN MUNICIPAL-REGIONAL PLANNING COMMISSION, WITH SUCH EXCEPTIONS OR CONDITIONS AS ARE INDICATED IN THE MINUTES OF THE COMMISSION ARE

_____

_____

THIS PRELIMINARY PLAT APPROVAL DOES NOT CONSTITUTE APPROVAL OF THIS SUBDIVISION IN FINAL FORM AND DOES NOT CONSTITUTE APPROVAL FOR RECORDING OF THE PLAT.

_____ DATE _____ SECRETARY, PLANNING COMMISSION

_____ DATE _____ CHAIRMAN'S INITIALS

UTILITY NOTE

THIS SURVEYOR HAS NOT PHYSICALLY LOCATED THE UNDERGROUND UTILITIES. ABOVE GRADE AND UNDERGROUND UTILITIES SHOWN WERE TAKEN FROM VISIBLE APPURTENANCES AT THE SITE, PUBLIC RECORDS AND/OR MAPS PREPARED BY OTHERS. THE SURVEYOR MAKES NO GUARANTEE THAT THE UNDERGROUND UTILITIES SHOWN COMPRISE ALL SUCH UTILITIES IN THE AREA, EITHER IN SERVICE OR ABANDONED. THE SURVEYOR FURTHER DOES NOT WARRANT THAT THE UNDERGROUND UTILITIES SHOWN ARE IN THE EXACT LOCATION INDICATED. THEREFORE, RELIANCE UPON THE TYPE, SIZE AND LOCATION OF UTILITIES SHOWN SHOULD BE DONE SO WITH THIS CIRCUMSTANCE CONSIDERED. DETAILED VERIFICATION OF EXISTENCE, LOCATION AND DEPTH SHOULD ALSO BE MADE PRIOR TO ANY DECISION RELATIVE THERETO IS MADE. AVAILABILITY AND COST OF SERVICE SHOULD BE CONFIRMED WITH THE APPROPRIATE UTILITY COMPANY. IN TENNESSEE IT IS A REQUIREMENT, PER "THE UNDERGROUND UTILITY DAMAGE PREVENTION ACT", THAT ANYONE WHO ENGAGES IN EXCAVATION MUST NOTIFY ALL KNOWN UNDERGROUND UTILITY OWNERS, NO LESS THAN (3) THREE NOR MORE THAN (10) TEN WORKING DAYS PRIOR TO THE DATE OF THEIR INTENT TO EXCAVATE AND ALSO TO AVOID ANY POSSIBLE HAZARD OR CONFLICT. TENNESSEE ONE CALL 1-615-366-1987 OR 1-800-351-1111.

TOTAL AREA = 993,754 SQUARE FEET OR 22.82 ACRES ±

RAGAN·SMITH
LANDPLANNERS • CIVILENGINEERS
LANDSCAPE ARCHITECTS • SURVEYORS
NASHVILLE
315 WOODLAND STREET
P.O. BOX 67015
NASHVILLE, TN 37206
(615) 244-8591
CHATTANOOGA
1410 COMMERCE STREET
SUITE 200
CHATTANOOGA, TN 37402
(423) 490-9900
• www.ragansmith.com •

CHRISTOPHER J. MABERY
REGISTERED LAND SURVEYOR
TENNESSEE NO. 2483

HUNTER POINTE
FOR
REALTY AMERICA GROUP, LP
4th CIVIL DISTRICT OF SUMNER COUNTY, CITY OF GALLATIN, TENNESSEE

DATE:	APRIL 23, 2014
APPROVED BY:	C. MABERY
DRAWN BY:	D. BRILEY
SCALE:	1" = 100'
JOB NO.	05-149
WK. ORDER	9432
REVISIONS	

PRELIMINARY PLAT

1 OF 1

DRAWING: ELE_PATH

NOTICE: THIS DOCUMENT DISCLOSES SUBJECT MATTER CONSIDERED CONFIDENTIAL BY DENHAM-BLYTHE, INC. AND ON WHICH DENHAM-BLYTHE, INC. HAS PROPERTY RIGHTS. NEITHER RECEIPT NOR POSSESSION THEREOF CONFERS OR TRANSFERS ANY RIGHTS TO REPRODUCE THE DOCUMENT OR ANY PART THEREOF, OR TO DISCLOSE ANY INFORMATION CONTAINED THEREIN TO OTHERS, OR TO USE IT FOR ANY PURPOSE WITHOUT THE WRITTEN PERMISSION OF DENHAM-BLYTHE, INC.

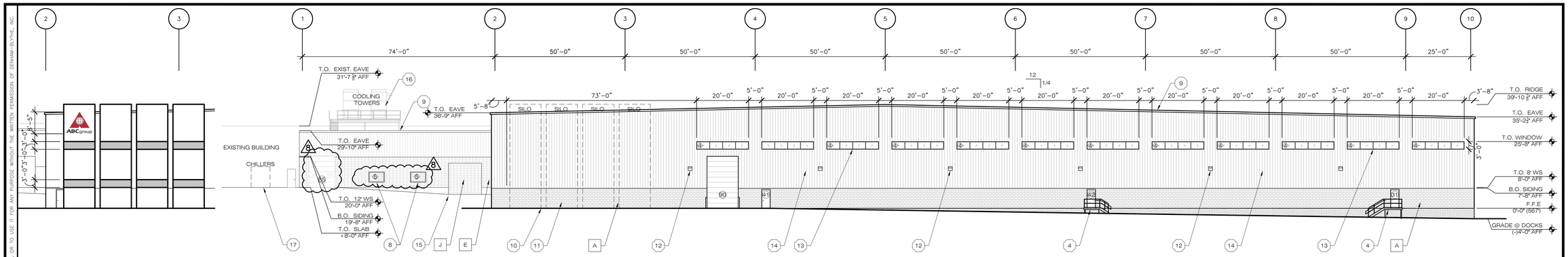

5 ELEVATION - SILOS
A-3.0 SCALE: 1/16"=1'-0

1 ELEVATION - SOUTH
A-2.0 SCALE: 1/16"=1'-0

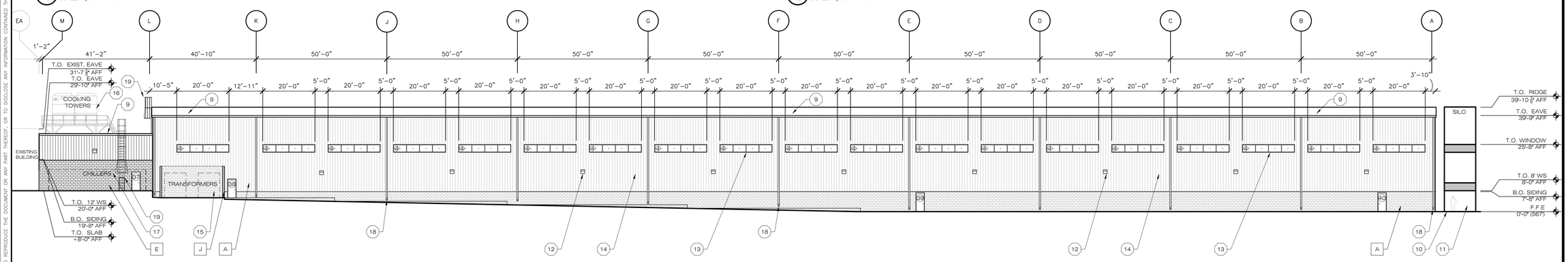

2 ELEVATION - WEST
A-2.0 SCALE: 1/16"=1'-0

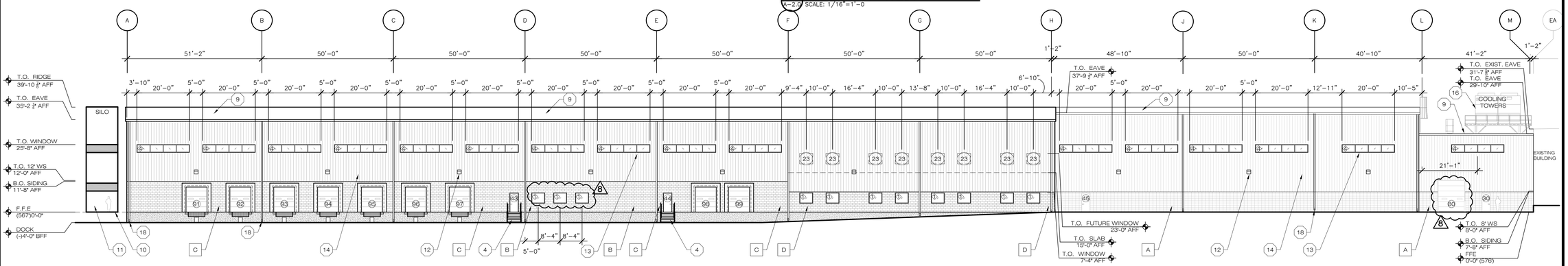

3 ELEVATION - EAST
A-2.0 SCALE: 1/16"=1'-0

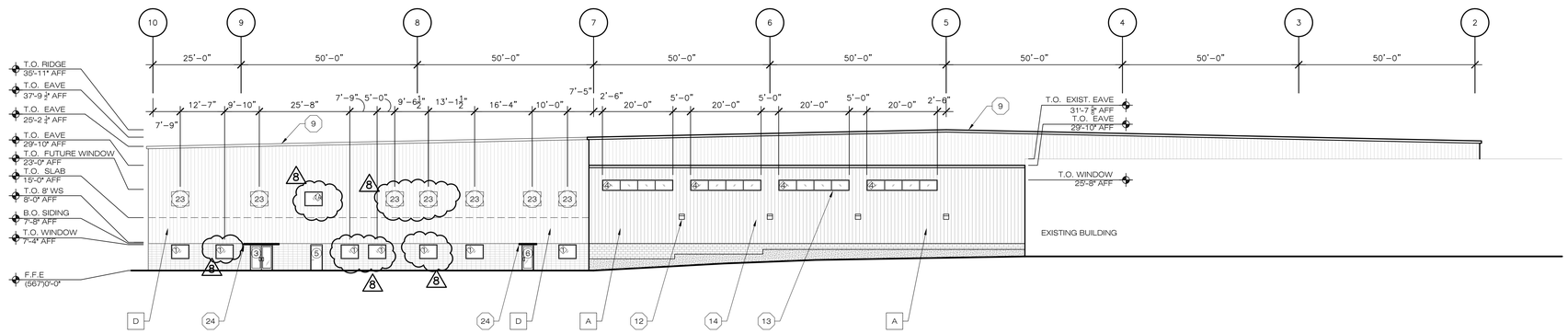

4 ELEVATION - NORTH
A-2.0 SCALE: 1/16"=1'-0

ITEM 2

PC0164-13

DO NOT SCALE DRAWINGS

FIELD VERIFY ALL EXISTING CONDITIONS

ABCgroup

ABC TECH
GALLATIN, TENNESSEE
FACILITY EXPANSION

DENHAM BLYTHE design/build
600 SPRINGFIELD HIGHWAY
LEBANON, TENNESSEE 37111
TEL: (615) 355-2344
FAX: (615) 355-2344

100 PAGE STREET
LEXINGTON, KY 40507
TEL: (859) 255-7405
FAX: (859) 255-7475

REV.	DATE	ISSUED FOR:	BY
8	5-22-14	GENERAL REVISIONS	OJ
7	5-12-14	FOR CONSTRUCTION	OJ
6	5-05-14	FOR CONSTRUCTION	OJ
5	4-28-14	GENERAL REVISIONS	OJ
4	4-25-14	FOR CONSTRUCTION REV.	OJ
3	4-11-14	GENERAL REVISIONS	OJ
2	4-09-14	GENERAL REVISIONS	OJ
1	3-28-14	FOR REVIEW	OJ

PROJECT MGR BR
DESIGNER OJ
ORIGINAL DATE 3 - 28 - 2014
JOB NUMBER 14-177

EXTERIOR ELEVATIONS

A-2.0

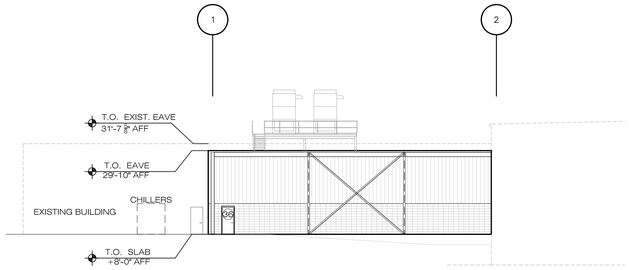

1 A-2.1 MECHANICAL ROOM NORTH INTERIOR ELEVATION
SCALE: 1/16"=1'-0

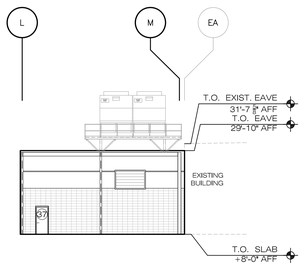

2 A-2.1 MECHANICAL ROOM WEST INTERIOR ELEVATION
SCALE: 1/16"=1'-0

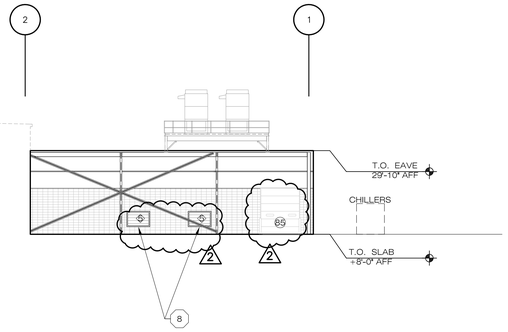

3 A-2.1 MECHANICAL ROOM SOUTH INTERIOR ELEVATION
SCALE: 1/16"=1'-0

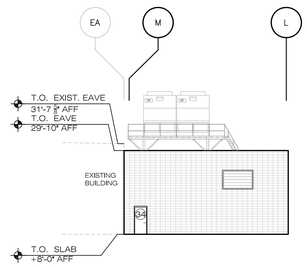

4 A-2.1 MECHANICAL ROOM EAST INTERIOR ELEVATION
SCALE: 1/16"=1'-0

DO NOT SCALE DRAWINGS

FIELD VERIFY ALL EXISTING CONDITIONS

NOTICE: THIS DOCUMENT DISCLOSES SUBJECT MATTER CONSIDERED CONFIDENTIAL BY DENHAM-BLYTHE, INC. AND ON WHICH DENHAM-BLYTHE, INC. HAS PROPERTY RIGHTS. NEITHER RECEIPT NOR POSSESSION THEREOF CONFERS OR TRANSFERS ANY RIGHTS TO REPRODUCE THE DOCUMENT OR ANY PART THEREOF, OR TO DISCLOSE ANY INFORMATION CONTAINED THEREIN TO OTHERS, OR TO USE IT FOR ANY PURPOSE WITHOUT THE WRITTEN PERMISSION OF DENHAM-BLYTHE, INC.

ABCgroup

ABC TECH
GALLATIN, TENNESSEE

FACILITY EXPANSION

DENHAM BLYTHE
design/build
100 PAGE STREET
LEBANON, TN 37011
TEL: (615) 355-2044
FAX: (615) 355-2044
100 PAGE STREET
LEBANON, TN 37011
TEL: 8159 355-7405
FAX: 8159 355-7405

REV.	DATE	ISSUED FOR:	BY
2	5-20-14	FOR CONSTRUCTION	OJ
1	4-25-14	CONSTRUCTION	OJ

PROJECT MGR BR
DESIGNER OJ
ORIGINAL DATE 3 - 28 - 2014
JOB NUMBER 14-177

MECHANICAL ROOM INTERIOR ELEVATIONS

A-2.1

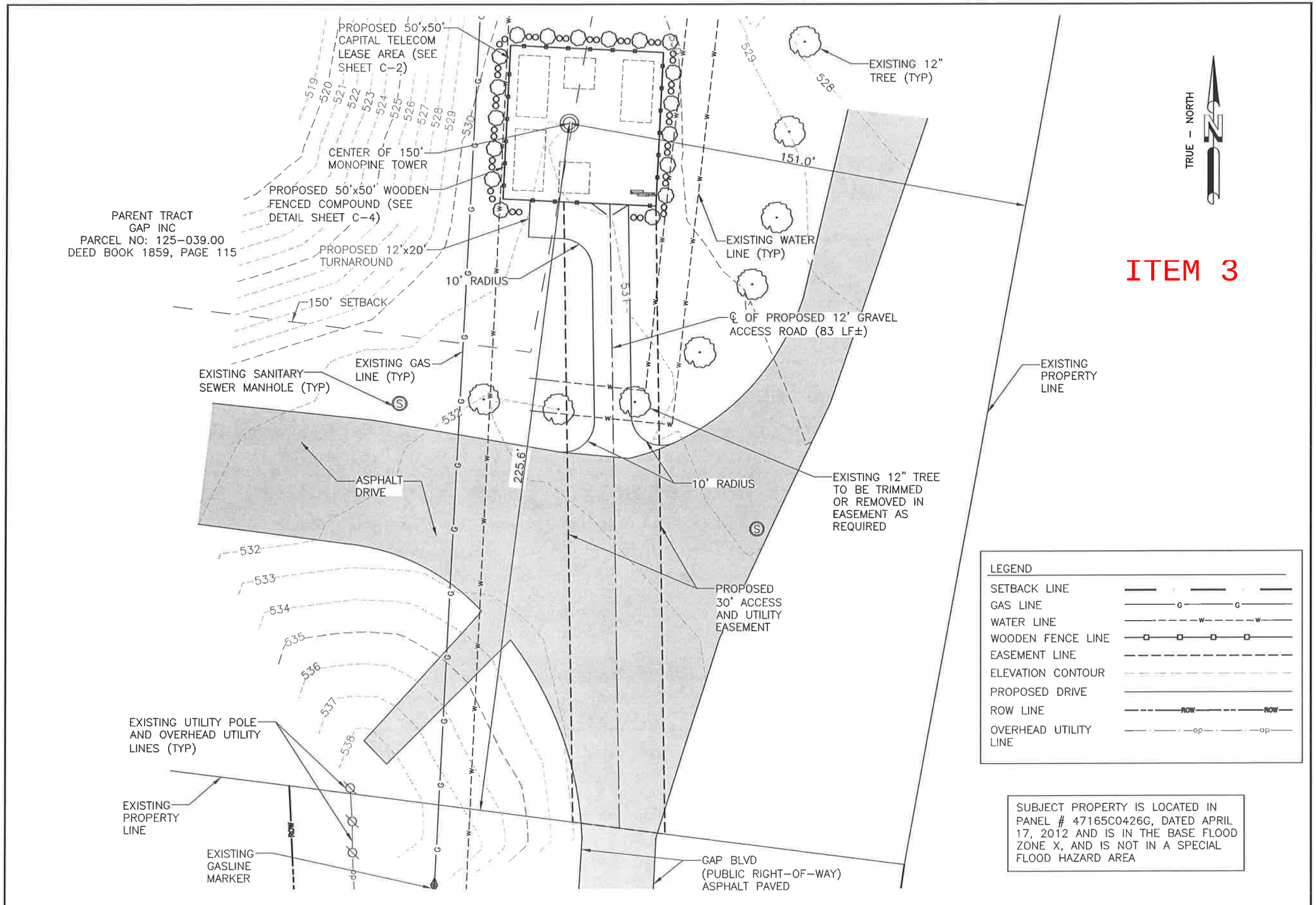

ITEM 3

SUBJECT PROPERTY IS LOCATED IN PANEL # 47165C0426G, DATED APRIL 17, 2012 AND IS IN THE BASE FLOOD ZONE X, AND IS NOT IN A SPECIAL FLOOD HAZARD AREA

SITE PLAN

SCALE: 1"=30'

CAPITAL TELECOM

SPACE RESERVED FOR PROFESSIONAL SEALS

PRELIMINARY DRAWING

(NOT VALID UNLESS STAMPED AND SIGNED)

THIS DRAWING IS COPYRIGHTED AND IS THE SOLE PROPERTY OF THE OWNER. IT IS PRODUCED SOLELY FOR USE BY THE OWNER AND IT'S AFFILIATES. REPRODUCTION OR USE OF THIS DRAWING AND/OR THE INFORMATION CONTAINED IN IT IS FORBIDDEN WITHOUT THE WRITTEN PERMISSION OF THE OWNER.

REVISIONS

NO.	DATE	DESCRIPTION	BY
0	05/23/14	ISSUED FOR CLIENT REVIEW	JDS

ENGINEER:

SMW ENGINEERING GROUP, INC.
TOGETHER PLANNING A BETTER TOMORROW

DRAWN BY: JLR SMW # 13-2011
CHECKED BY: JDS
DRAWING DATE: 01/07/2014

SITE NAME
SITE NAME: GAP GALLATIN TN

CAPITAL TELECOM SITE NUMBER
SITE # N/P

SITE ADDRESS
E911 ADDRESS N/P
GALLATIN, TN
SUMNER COUNTY

SHEET TITLE
SITE PLAN

SHEET NUMBER
C-1

PC 0297-14

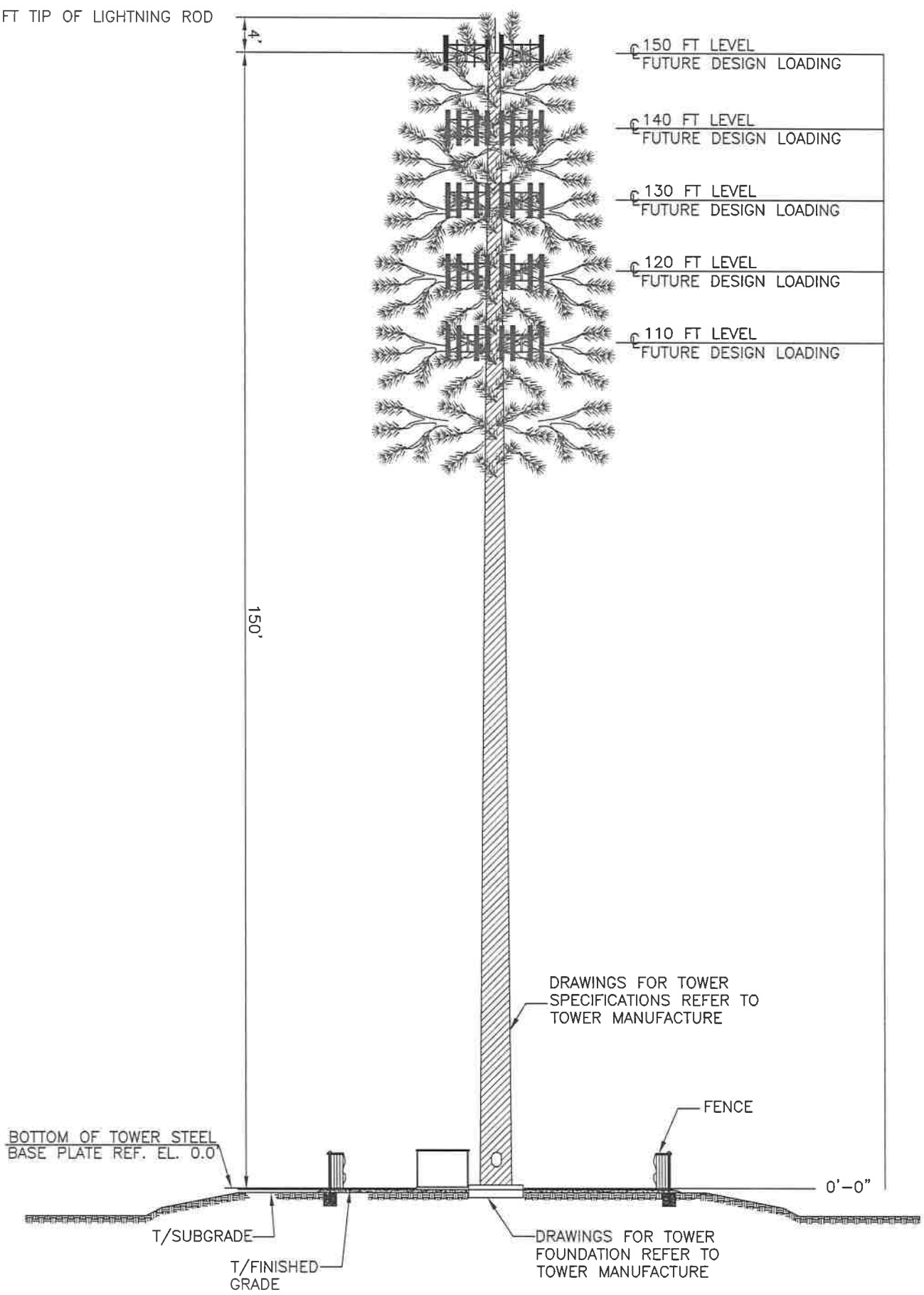

VERIFY TOWER DESIGN W/ STRUCTURAL ANALYSIS.

TOWER INFORMATION	
GAP GALLATIN TN	
150' MONOPINE TOWER	
N/A	
N/A	

TOWER LOCATION	
COORDINATES:	
LAT	36°21'59.797" N
LONG	86°29'41.481" W
GROUND ELEV	530.99 FT AMSL
FAA DET. HGHT.	N/A
FND. HGHT.	N/A

SCALE: N.T.S. | 1

CAPITAL TELECOM

SPACE RESERVED FOR PROFESSIONAL SEALS

PRELIMINARY DRAWING
(NOT VALID UNLESS STAMPED AND SIGNED)

THIS DRAWING IS COPYRIGHTED AND IS THE SOLE PROPERTY OF THE OWNER. IT IS PRODUCED SOLELY FOR USE BY THE OWNER AND ITS AFFILIATES. REPRODUCTION OR USE OF THIS DRAWING AND/OR THE INFORMATION CONTAINED HEREIN WITHOUT THE WRITTEN PERMISSION OF THE OWNER.

REVISIONS

NO	DATE	DESCRIPTION	BY
0	05/23/14	ISSUED FOR CLIENT REVIEW	JDS

ENGINEER:
SMW ENGINEERING GROUP, INC.
TOGETHER PLANNING A BETTER TOMORROW

DRAWN BY: JLR SMW # 13-2011
CHECKED BY: JDS
DRAWING DATE: 01/07/2014

SITE NAME
SITE NAME: GAP GALLATIN TN
CAPITAL TELECOM SITE NUMBER
SITE # N/P
SITE ADDRESS
E911 ADDRESS N/P
GALLATIN, TN
SUMNER COUNTY
SHEET TITLE
TOWER ELEVATION
SHEET NUMBER
C-3

PC0297-14

include grading or excavation. For any site plan approved prior to May 1, 2008, expiration shall occur under the terms of the original site plan approval.

15.03.030 Use and Occupancy Permit Required

No building or addition thereto, constructed after the effective date of this Ordinance, and no addition to a previously existing building shall be occupied, and no land shall be used for any purpose, until a use and occupancy permit has been issued by the Office of the Zoning Administrator. No change in a use other than that of a permitted use shall be made until a use and occupancy permit has been issued by the Zoning Administrator. This shall not apply to single-family and two-family detached dwellings.

15.03.040 Application for Use and Occupancy Permit

Every application for a zoning permit shall be deemed to be an application for a use and occupancy permit. Every application for a use and occupancy permit for a new use of land where no zoning permit is required shall be made directly to the Office of the Zoning Administrator.

15.03.050 *Deleted Ordinance No. O1103-19*

15.03.060 Records of Use and Occupancy Permits

A record of all use and occupancy permits issued shall be kept on file in the Office of the Zoning Administrator, and copies shall be furnished upon request to any person having a proprietary or tenancy interest in the property involved.

15.03.070 Final Inspection

No use and occupancy permit for a building, structure or an addition thereto, constructed after the effective date of this Ordinance, shall be issued until construction has been completed and the premises inspected and certified by the Office of the Zoning Administrator to be in conformity with the plans and specifications upon which the zoning permit was based and with the applicable performance standards established by Article 11.00 and Article 13.00.

15.03.080 Surety Required

Any application for a zoning permit or building permit which requires the submission of a site plan or Final Master Development Plan shall be accompanied by a surety in the amount of the estimated cost of site improvements including, but not limited to, water and sewer installation, parking lot and driveway paving, construction of border barriers, site grading, erosion control, screening and landscaping.

ITEM 4

Any private section of a development will also be required to submit a surety in the amount of the estimated cost of site improvements including, but not limited to, water and sewer installation, parking lot and driveway paving, construction of border barriers, site grading, erosion control, screening and landscaping. If an extension of the surety is permitted, as provided below, a new estimate to reflect an updated cost of completion shall be performed by the Codes/Planning Department and established as the estimate for such extension. The amount of the surety initially, and for any extension, shall be set in the amount of one hundred ten percent (110%) of the estimate by the Codes/Planning Department. The expiration date of the surety initially, and for any extension, shall be set as one (1) year from the initial date of submission of the surety.

The surety shall be in the form of cash, a certified check, or an Irrevocable Letter of Credit. All Irrevocable Letters of Credit submitted to the City must either be payable at a local bank within a 50-mile radius of the corporate limits of the City of Gallatin or specifically state that the letter of credit can be drawn upon by certified mail.

The surety shall name the City of Gallatin as obligee, shall comply with all statutory requirements and shall be satisfactory to the City Attorney as to form, sufficiency of surety, and manner of execution. All Irrevocable Letters of Credit shall be issued for such time as the planning commission deems is necessary for the completion of the improvements enumerated in the first paragraph of this section, but shall in no event exceed one (1) year and must contain automatic renewal provisions, in language satisfactory to the City Attorney, that provide for automatic renewal of the Irrevocable Letter of Credit unless the City is provided at least sixty (60) days' notice of non-renewal by the issuer of said Irrevocable Letter of Credit.

Upon proof of difficulty, the developer may petition the City for an extension of time for completion of the improvements. The petition must be in writing on forms provided by the Codes/Planning Department. The Planning Commission may, upon proof of difficulty, grant additional one (1) year extensions.

A surety may be reduced by the City upon actual completion and inspection of site improvements and then only to the ratio that the improvements completed bears to the total improvements for the plan. In no event shall a surety be reduced below fifteen percent (15%) of the principal amount prior to final acceptance of all items covered under the surety. A surety reduction shall be approved a maximum of twice a year and not more than once in any three (3) month period.

15.03.090 Temporary Use and Occupancy Permits

Nothing in this ordinance shall prevent the issuance of a temporary use and occupancy permit, as provided herein. A temporary use and occupancy permit is to be issued for a time period not to exceed one (1) year. In no instance shall a temporary use and occupancy permit be issued for a longer time period than the surety required to secure completion of all site improvements and off-site improvements.

PROJECT NAME: SITE SURETY COST CALCULATIONS DATE:

FILE #

ITEM		UNIT	QTY.	$/UNIT	TOTAL
UTILITIES (from connection to building)					
WATER SERVICE (Per GPU)		LF	0	30.00	0.00
SEWER SERVICE (Per GPU)		LF	0	45.00	0.00
PAVING					
GRAVEL BASE COURSE (6 inch deep) p.366 (#0100)		SY	0	7.19	0.00
RIP RAP (3" to 6") (Per TDOT/Eng.)		TON	0	24.18	0.00
BINDER COURSE - 1.5 inch p.368 (#0080)		SY	0	5.82	0.00
BINDER COURSE - 2 inch p.368 (#0120)		SY	0	7.68	0.00
BINDER COURSE - 2.5 inch p.368 (#0130)		SY	0	9.50	0.00
CONCRETE					
CONCRETE WALKS (4" thick sidewalk) p.611(#1620)		SF	0	5.46	0.00
CURB & GUTTER - (24" wide) p.374 (#0430)		LF	0	18.80	0.00
DRAINAGE					
DRAINAGE PIPE - 12" p.484 (#2080)		LF	0	24.04	0.00
DRAINAGE PIPE - 15" p.484 (#2100)		LF	0	30.02	0.00
DRAINAGE PIPE - 18" p.484 (#2120)		LF	0	32.11	0.00
DRAINAGE PIPE - 24" p.484 (#2140)		LF	0	38.19	0.00
DRAINAGE PIPE - 30" p.484 (#2160)		LF	0	51.55	0.00
DRAINAGE PIPE - 36" p.484 (#2180)		LF	0	58.55	0.00
DRAINAGE PIPE - 48" p.484 (#2200)		LF	0	83.45	0.00
DRAINAGE PIPE - 60" p.484 (#2220)		LF	0	128.15	0.00
TRENCH DRAIN/GRATE (medium) p.243 (#6670)		LF	0	49.35	0.00
HEADWALLS (Per Eng.)		EA	0	1000.00	0.00
INLETS/CATCH BASINS (Per Eng.)		EA	0	2000.00	0.00
MANHOLES (Per Eng.)		EA	0	2000.00	0.00
RETAINING WALL (w/reinforcement) p.387 (#7140 + #7260)		SF	0	20.50	0.00
LANDSCAPING (Bufferyard only)					
LARGE DECIDUOUS TREES (Per estimates)		EA	0	200.00	0.00
FLOWERING/PINE TREES (Per estimates)		EA	0	150.00	0.00
SHRUBS (Per estimates)		EA	0	60.00	0.00
SOD (1 inch deep) p. 396 (#0020)		SF	0	0.25	0.00
FINAL STABILIZATION (Seed & Straw) (Per Eng.)		SF	0	0.03	0.00
MISC.					
				SUBTOTAL	$ -
				OH&P@10%	0.00
				GRAND TOTAL	**$ -**
REFER TO G.Z.O., SECTION 15.03.080 *SURETY REQUIRED*					
Page and item numbers refer to 2012 RSMeans Site Work and Landscape Cost Data.					

Planning Department Proposal to develop a Unified Land Development Code

The current Zoning Code was adopted on July 7, 1998, at considerable cost, and has been amended many times since. The Subdivision Regulations were adopted On April 28, 2008 and the Stormwater Regulations were adopted December 21, 2004. The Planning Department is proposing to begin the process of developing a Unified Land Development Code and transition from the City Zoning Code, Subdivision Regulations, Stormwater Regulations and other design standards and location criteria of the City's code into a single document dealing with all aspects of development. The Unified Land Development Code can be adopted by Ordinance or a series of Ordinances over a period of time to allow for thorough review and make the process of transition to the Unified Land Development Code more manageable. (A draft outline of the unified development code is attached).

The strategy for preparing and adopting the code will be done in stages with certain chapters being reviewed, discussed and approved on a monthly basis. Initially, an Interim Land Development Code will be adopted focusing on the more important and expeditious/priority needs. This will allow for the Planning Commission and Council time to review the proposed changes and not feel overwhelmed with the volume of material that will need to be reviewed. In addition, it may be appropriate and advisable to establish a code review committee composed of at least one elected official, a Planning Commission member, a Board of Zoning Appeals member, select City staff and members of the community, particularly those involved in designing projects and having to apply the code when designing projects. This could include engineers, developers, home builders/construction industry representatives, business operators or other interested individuals. The Land Development Code would become an appendix to the City Code of Ordinances (Gallatin Municipal Code) and would be managed/codified by the Municipal Code Corporation (MCC), which currently maintains/updates the City's Code of Ordinances. This will relieve City staff from having to revise the code each time there are amendments. The MCC also cross references the code, provides supplement updates bi-annually, maintains the table of contents and page numbering, and notes any amendment to the code as part of each section. As each Chapter is reviewed and approved, it will be transferred from the existing location to the interim Land Development Code. Once the complete code is amended and transferred then the Zoning Code may be repealed and the interim code adopted as the City's Uniform Land Development Code.

With an ever increasing development pace this will provide for more efficient operations of the Planning, Engineering and Building/Codes Department and the development review process. While there are many issues that need attention, the priority is to focus on definitions, and the administrative process. In some cases only a codification of the existing code will be needed [ex: sign Ordinance (now Article 13, Section 13.07)]. This can be easily transferred from the Zoning Code to the Land Development Code without any text changes.

The department would first like to propose additional definitions and make some minor modifications to existing definitions and amend portions of the review process to clarify the level and detail of information required for each level of review and to better establish administrative review criteria such as the application process and threshold levels and procedures for review. Definitions will need to be carefully reviewed, supplemented, and possibly cross-referenced using definitions and classifications of the North American Industry Classification System and other sources. Definitions will always need to be added or modified, so this process likely will extend through the whole amendment process and even after the code is fully adopted.

Proposed Zoning Code Amendment to revise the requirements for Preliminary Master Development Plans, Final Master Development Plans and Site Plans

The Zoning Ordinance, Article 12.00, Section 12.02 establishes the requirements for Preliminary Master Development Plans (PMDPs) and Final Master Development Plans (FMDPs). PMDP and FMDPs are required for specific zoning districts and must accompany any application for a rezoning within these specified districts during the initial establishment of zoning or rezoning of property and upon further plan development of phases. The PMDP is a part of the zoning of the property, which is a graphic representation of the layout and spatial placement of improvements to be developed on the property. The property may be developed in phases when such phases are depicted on the PMDP drawing. PMDP's shall be consistent with the underlying zoning regulations unless specifically altered to fit the setting and unique features of the property. In many ways a PMDP functions like a Planned Unit Development plan. Any deviations or alternatives from bulk regulations, area regulation, height regulation, use regulation or other requirements of the underlying zoning as described in Section 12.02.020. F.1 shall be specifically identified by graphic representation and in tabular/narrative form and include the information listed in Section 12.02.010 B. 1-12. (Attached)

All FMDPs shall be consistent with the approved PMDP for the property. The FMDP requires a more detailed plan indicating any one or more of the PMDP approved plan phases contemplated at the time as described in Section 12.02.0030 B. The FMDP acts as a final site plan except it does not need to include full scale engineered plans for a site. The final engineering plan takes place after the FMDP or a Planning Commission review and approval of a site plan. The final engineering plan shall be consistent with the FMDP and be the final approved plan for purposes of construction/permitting.

Site plan requirements are described in Article 15, Section 15.03.020 (Attached). The code describes a process and thresholds for administrative site plan review and for site plans that require Planning Commission review. It does not indicate all requirements for engineering review and approval. The department is proposing to better establish/identify the criteria and thresholds for site plans that require Planning Commission approval and those that permit administrative approval. An example of plan review level thresholds could be as follows:

- All commercial sites of less than three acres would be reviewed administratively and upon submittal of an application for site plan review may proceed straight to engineering level review.

- All industrial sites of less than 10 acres would be reviewed administratively and upon submittal of an application for site plan review can proceed straight to engineering level review.
- Any addition to commercial, mixed-use or industrial sites of greater than a 50% expansion of floor area and which would exceed the thresholds above shall require review by the Planning Commission.
- All residential development exceeding 10 units on a single parcel of land or a zoned lot.
- Any institutional use site plan shall require Planning Commission approval unless the institutional use currently exists or the proposed expansion is less than 25% of the existing structure. Any change of use or a new use shall require Planning Commission approval.

(Exceptions could be made for unique or special districts such as downtown or the Nashville Pike Corridor Overlay Plan.)

Sample of Proposed Review Thresholds

Planning Commission Plan Review	Administrative Plan Review
Rezoning/Zoning*	Site Plans
Re-zoning/Zoning with PMDP*	Commercial/MU Zoning <3 acres
FMDPs	Industrial Zoning < 10 acres
Site Plans	Residential <10 units/parcel/lot
Commercial/MU Zoning >3 acres	Institutional Uses <25% expansion
Industrial Zoning> 10 acres	Minor additions to sites & buildings
Residential > 10 units /parcel/lot	
Institutional Uses +>25% expansion	
Any site plan requesting alternative bufferyards, signs or architecture	
Preliminary Plats	
Final Plats	

Staff can provide a listing or copy of sketch plans that are being considered for administrative review to the Planning Commission.

*Public Notice required.

Attachment – Draft Outline of Unified Land Development Code
Section 12.02 and Sections 15.03.020 - 15.03.080

I: Land Development Code\Draft Land Development Code Amendments\Chapter 3-Zoning Use and Classifications\ Proposed Zoning Code Amendment for PMDP, FMDP & Site Plans

ATTACHMENT 1

[PART, CHAPTER, ARTICLE, DIVISION, SECTION]

Draft Gallatin Land Development Code Table of Contents

PART III. Unified Land Development Code

INTRODUCTION

Title 01.01

Legislative Enactment 01.02

Intent and Purpose 01.03

Effective Date 04.11

Chapter 1. Terms and Definitions

Article I. Rules of Construction of Language 02.01

Article II. Definition of Terms 02.02

Chapter 2. Legal Status and Provisions 04.00

Article I. Administration and Enforcement 15.01

Section 1. Administrative Standards 03.10

Section 2. Appointment and Duties of the Zoning Administrator 15.02

Section 3. Interpretation 04.01

Section 4. Relationship to Other Laws and Private Restrictions 04.02

Section 5. Ordinance Provisions Do Not Constitute Permit 04.03

Section 6. Provisions are Cumulative 04.04

Section 7. Zoning Permits and Use and Occupancy Permits 15.08

Section 8. Change of Use 04.10

Section 9. Application of Regulations 04.06

Section 10. Scope of Regulations 04.07

Section 12. Remedies and Enforcement 15.08

Section 11. Severability 04.05

DRAFT

Article II. Hearing Procedures

Article III. Comprehensive Plan - General Development and Transportation Plan

Section 1. General Provisions

Section 2. Development Compliant with Comprehensive Plan

Section 3. Legal Status

Section 4. Jurisdiction

Section 5. Amendments

Article IV. Non-Conforming Uses, Land and Structures and Related Provisions 14.01-14.04

Section 1. Statement of Purpose 14.01

Section 2. Conflicts with State and Federal Law 14.01.010

Section 3. Non-Conforming Commercial, Industrial and Business Establishments/Uses 14.02

Section 4. Applicability 14.02.010

Section 5. General Provisions 14.02.020

Section 6. Non-Conforming Residential Uses 14.03

Section 7. Applicability 14.03.010

Section 8. General Provisions 14.03.020

Section 9. Non-conforming Residential Use and Buildings in Commercial Zoning Districts 14.03.030

Section 10. Non-Conforming Multi-family Residential Establishments 14.04

Section 11. Non-Conforming On-Premises Signs 14.05

Section 12. Applicability 14.05.010

Section 13. General Provisions 14.05.020

Section 14. Non-conforming Billboards 14.06

Section 15. Non-conforming Uses, Buildings or structures located in Special Flood Hazard Areas 14.07

Article V. Vested Rights (TCA 47-3-203)

Article VI. Amendments 15.07

Chapter 3. Zoning Classifications and Regulations 03.01

Article I. Establishment of Districts and Official Zoning Map

Section 1. Provisions for an Official Zoning Map 05.02

Section 2. Adopting the Official Zoning Map

Section 3. Amending the Official Zoning Map

Section 4. Rules for Interpretation of District Boundaries 05.03

Section 5. Application of District Regulations 05.04

Section 6. Regular (Non-Master Planned) Districts 05.01

Section 7. Residential Districts

Section 8. Commercial Districts

Article II. Principal Uses and Activity Classifications 03.02 and 03.04

Section 1. Residential Activities, Class and Type 03.05

Section 2. Community Facilities Activities, Class and Type 03.06

Section 3. Commercial Activities, Class and Type03.07

Section 4. Industrial (Manufacturing) Activities, Class and Type 03.08

Section 5. Agricultural Activities, Class and Type 03.10

Article III. Residential District Regulations 05.01.010 & 06.01

Section 1. Agricultural Residential (A) 06.02

Section 2. Low Density Residential (R40) 06.03

Section 3. Low Density Residential (R20) 06.04

Section 4. Medium Density Residential (R15) 06.05

Section 5. Medium Density Residential (R10) 06.06

Section 6. Medium Density Residential (R8) 06.07

DRAFT

Section 7. High Density Residential (R6) 06.08

Section 8. Planned Residential Development (PRD)

Article IV. Mixed Use District Regulations 07.01 & 07.03

Section 1. Office Residential District (OR) 07. 08

Section 2. Core Commercial District (CC)

Section 3. Mixed Use Limited (MUL) 07.05

Section 4. Mixed Use General (MUG) 07. 04

Section 5. Multiple Family Residential & Office (MRO) 07.02

Article V. Office-Commercial District Regulations 05.01.02 & 08.00

Section 1. Medical –Professional Districts (MPO) 07.06

Section 2. General Office District (GU) 07.06

Section 3. Core Commercial District (CC) 08.01

Section 4. Commercial Services (CS) 08.02

Section 5. Commercial Serviced Limited (CSL) 08.08

Section 5. Commercial General (CG) 08.03 & 08.03.050

Section 6. Planned General Commercial (PGC) 08.04

Section 7. Planned Neighborhood Commercial (PNC) 08.05

Section 8. Unassigned 08.06 & 08.07

Section 9. Reserved.

Article VI. Industrial District Regulations 05.01.030 & 09.01

Section 1. Industrial Restrictive (IR) 09.02

Section 2. Industrial General (IG) 09.03 & 09.03.010

Section 3. Planned Business Park (PBP) 09.04

Article VII. Specific Plan District (SPP)

Article VIII. Preliminary Master Development Plans & Final Master Development Plans 12.02

DRAFT

Article IX. Special Overlay Districts (05.01.04) & 10.01

Section 1. Historic Overlay (H-1) 10.02

Section 2. Airport Overlay (AO) 10.04

Section 3. Flood Plain Management (FL) 10.03.041 & 10.03.080

Section 3. Commercial Corridor A - Reserved.

Section 4. Commercial Corridor B - Reserved

Section 5. Adult Entertainment 12.15 & 09.03 010 E.

Article VIII. Conditional Uses/Special Exceptions 15.06

Section 1.

Section 2. Modification of previously approved Conditional Use Permit 04.08

Article IX. Supplementary/Miscellaneous Regulations 12.00 & 12.01

Section 1. Telecommunication Towers and Antennas 12.11

Section 2. Mobile Home Parks 12.12, Mobile Homes, & Mobile Home Subdivsions

Section 3. Accessory Uses and structures 12.01.030

Section 4. Home Occupations 12.14

Section 5. Community Residential Homes

Section 6. Performance and Design Standards 13.01, 13.02 , 13.03

Section 7. Fences, Walls & Hedges 12.01.020

Section 8. Permitted Obstructions in Required Yards 12.01.015 & Ch. 15, Sec 15-5

Section 8. Visibility/Sight Distance at Intersections 12.01.010 & Ch. 15, Sec 15-5

Section 9. Awnings Projecting Over Streets – Ch. 15, Sec 15-5

Section 10. Semi-Trailer Freight Containers/Outdoor Storage units 12.01.040

Section 11. Requirements to Move Single Family Residence from One Foundation to Another 12.03 *(also see Ch 5, Arti. VIII, GMC)*

Section 12. Spacing of Buildings on a Single Zoned Lot 12.05

DRAFT

Section 13. Exceptions to Height Regulations 12.06

Section 14. Structures to Have Access 12.07

Section 15. Party Walls (Common Walls) 12.09

Chapter 4. Buildings and Building Regulations Ch. 5, CGCO

Chapter 5. Flood Plain Management 10.03

Article I. Flood Management Definitions 10.03.41

Article II. Flood Regulations Variance Procedures 10.03.080

(Also see Sec 10.03 and Chapter 3, Article VII.)

Chapter 6. Environmental Regulations

Article I. Landscaping and Vegetation Preservation Standards

Section 1. Transitional Buffer yards 13.04

Section 2. Parking Area Screening & Landscape Design 13.05

Article II. Development on Steep Slopes 12.13

Article III. Grading Standards 13.10 (*Also see Ch. 15, Sec. 15-151 & Ch.18 Art. III, GMC)*

Article III. Protection of Wetlands, Natural Drainage Ways, & Unique Natural Features

Article IV. Reserved.

Chapter 7. Signs Regulations 13.07

Chapter 8. Architectural Standards 13.08

Chapter 9. Board of Zoning Appeals 15.04

Chapter 10. Variances 15.05

Article I.

Article II.

Section 1. Modification of previously approved Use, Land or Structure 04.08

Chapter 11. Annexation/De-annexation Ch. 51, 6-51-101-118 and 6-51-201-204.

Chapter 12. Transportation Facilities and Roadway Design

DRAFT

Article I. Intent of traffic control and Access Management Design Standards 13.06 & Ch. 15, Sec. 15-160

Article II. Street Design and Construction Standards *{See Subdivision Regulations} T.C.A. 13-4-403 (b)*

Section 1. Arterials and Collector Street Design and Specifications

Section 2. Local Street Design and Specifications 12.10

Section 3. Alleyway Design and Specifications

Section 4. Bridge and Culvert Design and Specifications

Section 5. Structures to Have Access *(Also see Chapter 4, Art. IV above)(Ch 15. Art. IV, Sec 15-160)*

Article III. Bikeways and Pedestrian Facility Design Standards

Article IV. Parking and Loading Regulations 11.01

Section 1. General Regulations, On-Street and Off-Street Parking 11.02

Section 2. Schedule of Parking Requirements 11.03 *(also see Ch. 16, Art. VI, GMC)*

(a) Required Parking by Use 11.03
(b) Adjustment for Mixed-Use Development 11.05
(c) Bonus Parking Provisions 11.08
(d) Disabled Permit Parking 11.07
(e) Parking, Storage of Use of Major Recreation Equipment 12.08

Section 3. Parking Facility Location 11.04

Section 4. Parking Lot Design Standards 11.09 (off-street parking design standards)

(a) Off-Street Parking Lots and Spaces
(b) On-Street Parking Spaces

Section 5. Loading Area Requirements 11.10

(a) Off-Street Loading Facilities and Standards

Article V. Public and Private Utilities

Chapter 13. Subdivision Regulations

Article I. General Provisions *[T.C.A. 13-4-403(a), (c) and 13-4-303 (a)]*

Section 1. Title 1-101

DRAFT

Section 2. Authority 1-102

Section 3. Purpose and Intent

Section 4. Jurisdiction 1-103

Section 5. Policy and Procedure 1-104

Section 6. Applicability

Section 6. Repeal of Previous Regulations 1-105

Section 6. Amendments to Subdivision Regulations *[T.C.A. 13-3-403 (c) & 13-4-303 (c)]*

Section 7. Conservation Subdivisions/Clustering

Article II. Definitions

Article III. Subdivision Layout and Design Standards

Article IV. Required Improvements

Article V. Platting Procedures

Section 1. General Plat Procedures 2-101 *[Pre-Plat T.C.A. 13-3-403 (b)]*

Section 2. Plat Approval Requirements 2-101.1 *[T.C.A 13-3-403 (b), 13-3-404, 13-4-304]*

Section 3. Conformance to Applicable Rules and Regulations 2-101.2

Article VI. Exemptions :

Section 1. Minor "Two from One"/Lot Split subdivisions

Section 2. Boundary Adjustments

Section 3. Lot Combinations

Chapter 15. Site Development Plans 15.03.020

Chapter 16. Stormwater Management Regulations (Also see Chapter 6) *Ch 18, GMC*

Chapter 17. Utilities *(See Chapter 17, GMC)*

Article I. In General

Article II. Potable Water *[see T.C.A 13-3-403 (b)]*

Article III. Sanitary Sewer System

DRAFT

Article IV. Gas Lines

Article V. Reuse Water

Article VI. Private Utilities

Chapter 18. Property Rights *(see Tenn. Constitution Art. 1, Sec 17 & 21 & T.C.A. 29-39-102)*

(see Tenn. Constitution Art. II , Sec 2 & Sec. 34, Art. I)

Chapter 19. Transfer of Development Rights (Gallatin on the Move 2020, pg. 3-5, 3-9, 6-2,6-4 and T.C.A. §13-7-101 and §13-7-201 (a)(2)

GMC=Gallatin Municipal Code

DRAFT

ATTACHMENT 2

or berm, the combined height of the fence and wall shall not exceed the maximum height that would apply to a fence or wall alone, in relation to the grade on the highest side of the wall.

c. Fences or walls provided to meet the requirements outlined in Section 13.04, Transitional Bufferyard Design Standards, may be exempted from the height and location standards as necessary to meet the requirements of that section when approved as part of an overall landscape and bufferyard plan.

d. The Zoning Administrator may approve driveway entry features, including, but not limited to, decorative columns and gates, at a height greater than the height specified in Section 12.01.020.C.5 a through c.

6. Maintenance Required – All fences and walls shall be maintained in good repair and in a safe and attractive condition, including but not limited to replacement of missing, decayed, or broken structural and decorative elements.

12.01.030 Accessory Structures

behind building or behind front setback of building? →

No accessory structures shall be erected in any required front yard. Accessory structures such as detached garages and storage buildings may be located at any point at least five (5) feet behind the principal structure, and a minimum of four (4) feet from all side and rear property lines. No accessory structures are permitted in any easements. A garage may be connected to the principal residence but must adhere to the prescribed yard setbacks for the zoning district. See Interpretation 4-10-03 (S) Swimming Pools

12.01.040 Semi-Trailer (Van or Box) Freight Container Outdoor Storage Unit (see ORD# 01-06-67) Why Here?

12.02 Preliminary Master Development Plan and Final Site Development Plan Requirements and Approval

As required by this Ordinance, the establishment of certain zoning districts shall be conditioned upon the application for and approval of a preliminary master development plan after public hearing as specified in Section 15.07 of this Ordinance. This section outlines the plan requirements and the process for preliminary master development plan and final master development plan review and approval.

(MRD, PRD, MU, MPO, GO, OR, S.P, PGC, PNC, PBP)

12.02.010 Preliminary Master Development Plan Required

A. Pre-application Conference: Prior to the filing of the application for a zoning amendment requiring the approval of a preliminary master development plan, the applicant shall confer with the City Planning and Engineering staff to determine whether the applicant is proceeding under the proper section of this ordinance, to consider the desirability or necessity of amending the application or previously approved preliminary master development plan, to clarify the issues to be addressed with the application, and to discuss any other issue that may aid in the disposition of the project.

B. Preliminary Master Development Plan Information: A preliminary master development plan shall be prepared and submitted to the Planning Commission as part of the application for a zoning amendment. The preliminary master plan shall be

side or rear yard. If a fence is constructed on top of a retaining or other wall or berm, the combined height of the fence and wall shall not exceed the maximum height that would apply to a fence or wall alone, in relation to the grade on the highest side of the wall.

c. Fences or walls provided to meet the requirements outlined in Section 13.04, Transitional Bufferyard Design Standards, may be exempted from the height and location standards as necessary to meet the requirements of that section when approved as part of an overall landscape and bufferyard plan.

d. The Zoning Administrator may approve driveway entry features, including, but not limited to, decorative columns and gates, at a height greater than the height specified in Section 12.01.020.C.5 a through c.

6. Maintenance Required – All fences and walls shall be maintained in good repair and in a safe and attractive condition, including but not limited to replacement of missing, decayed, or broken structural and decorative elements.

12.01.030 Accessory Structures

No accessory structures shall be erected in any required front yard. Accessory structures such as detached garages and storage buildings may be located at any point at least five (5) feet behind the principal structure, and a minimum of four (4) feet from all side and rear property lines. No accessory structures are permitted in any easements. A garage may be connected to the principal residence but must adhere to the prescribed yard setbacks for the zoning district.

No accessory structure without a permitted primary use/structure.

12.01.040 Semi-Trailer (Van or Box) or Freight Container Outdoor Storage Unit

"Semi-Trailer (Van or Box)" shall mean a pre-manufactured trailer of metal construction without a front axle that is delivered to a site as a fully contained storage unit and is used for the primary purpose of storing items or goods within the semi-trailer (van or box). A large proportion of its weight is supported by a landing gear (legs which can be lowered) to support it when it is uncoupled.

"Freight Container" shall mean a pre-manufactured structure of metal construction that is delivered to a site as a fully contained unit and is used for the primary purpose of storing items or goods within a structure outside of a building.

"Outdoor Storage Unit" shall mean Semi-Trailer (Van or Box) or Freight Container rented or owned by the owner or occupant of a property that is designed for the primary purpose of storing items or goods.

A. Outdoor Storage Units are allowed to be placed within all Commercial and Industrial Zone Districts and shall comply with all applicable zoning and building regulations.

FROM ORDINANCE 01106-67 10-4-11

B. Outdoor Storage Units shall be accessory to a principle building or use and subject to compliance with all the following requirements:

1. Units shall not be placed on public property, on public right-of-way, or in a location that obstructs traffic visibility.
2. Units shall not be located in any required yard setbacks, bufferyard, off-street parking spaces or loading/unloading areas or fire lanes.
3. Units shall not be located in floodways or floodplains. Refer to Gallatin Zoning Ordinance Article 10.00, Special District Regulations, Section 10.03, Statutory Authorizations, Findings of Fact, Purpose and Objectives Related to Municipal Floodplain Ordinance.
4. Units shall not block, obstruct, or reduce in any manner any required exits, windows, vent shafts, parking spaces, and/or access driveways.
5. Units shall be located behind the front facade (building line) of the main building. If the property is located on a corner lot with two streets abutting the property than they shall be located behind the rear of the building or side of the building opposite the adjacent street.
6. Units shall not be stacked on top of each other or on any other structure.
7. Units shall not exceed 48 feet in length, 9 feet in width, and 14 feet in height.
8. Units are not allowed within visibility of a residential neighborhood unless screened by a suitable fence, wall or evergreen trees or shrubs. Evergreen trees or shrubs used to meet screening requirement shall be sufficient of height and size to provide screening immediately upon planting.
9. Units shall not be used for human or animal habitation, or store hazardous or combustible materials.
10. Units shall be maintained in a good state of repair, free from rust, peeling or fading paint, and other forms of visible deterioration.
11. Refuse and debris shall not be stored in, against, on, or under the units.
12. No signage, lettering, text, or artwork shall be placed on any units.
13. A person whose property meets the requirements is limited to one (1) unit for the first two (2) acres, and two (2) additional units for property containing more than two (2) acres.
14. Existing units shall come into conformance with regulations within two (2) years following final passage of this ordinance.

Comment [KS1]: Added new section per Ordinance O1106-67.

12.02 Preliminary Master Development Plan and Final Site Development Plan Requirements and Approval

As required by this Ordinance, the establishment of certain zoning districts shall be conditioned upon the application for and approval of a preliminary master development plan after public hearing as specified in Section 15.07 of this Ordinance. This section

a general concept plan which shall be drawn to a scale of not less than 100 feet to the inch and shall include the following information:

1. Written description of the proposed project, including information addressing the overall concept, proposed uses and development schedule of the project. Same
2. Property boundary lines, dimensions, topography, general physical features of the property, and a location map of the proposed project.
3. Identification of surrounding property owners according to the latest tax roll available at the Sumner County Property Assessor's Office. Legal description?
4. Generalized transportation plan including routes of proposed major streets, driveways, sidewalks, and pedestrian ways. to align with adjacent streets and consistent with the adopted Comp Plan.
5. Identification of the proposed use of the property, including a tabulation of the land area to be devoted to various uses and activities and overall densities/intensities
6. A general landscaping plan including the location of major existing ~~growth~~ vegetation and historic features that is to be retained. The landscape plan shall include general information pertaining to bufferyards and required landscaped areas and open space areas.
7. General locations and types of utilities and easements.
8. General locations and description of proposed storm drainage.
9. Accompanied by Preliminary estimates of traffic volumes and movements to and from the completed project and along the boundary streets.
10. General information sufficient to describe the general design of the development as required by the City Planner.
11. Statement/note indicating the Proposed means of dedication of common open space areas and description of the proposed organizational arrangements for the ownership, maintenance, and preservation of common open space.
12. A preliminary time schedule for completion of the entire project.

conceptual architectural designs

12.02.020 Adoption of a Preliminary Master Development Plan (PMDP)

The following steps shall constitute the process by which a preliminary master development plan is adopted:

A. The Planning Commission shall study the preliminary master development plan and supporting data and may make suggestions for changes and adjustments. Upon review and discussion, the Commission shall recommend approval or disapproval of the preliminary master development plan and submit this recommendation with a brief report to the [redacted] Aldermen.

The [redacted] Aldermen shall review and discuss the proposed preliminary master development plan and approve or disapprove the proposal with or without conditions. The [redacted] Aldermen's actions shall comply with Section 15.07 of this Ordinance and shall constitute the final action required of a proposal for preliminary approval. Whenever the [redacted] Aldermen approve the preliminary master development plan

and supporting material, one copy shall be filed in the Office of the Zoning Administrator/City Planner, ~~and~~ one copy shall be given to the Owner, ~~[illegible]~~.

Upon receipt of the approved preliminary master development plan, the Owner may proceed with preparation of final master development plans and specifications for all or for any portion of the project. The final master development plan shall be reviewed and approved by the Planning Commission according to the provisions of Section 12.02.030. Upon approval by the Planning Commission, one copy shall be filed in the office of the Zoning Administrator/City Planner and a copy provided to the owner. No building permits shall be issued until the final master development plan of the proposed development, or portion thereof, is approved and filed with the Zoning Administrator/City Planner.

B. Modification of Preliminary Master Development Plan: The Planning Commission or the [redacted] may require modification of a preliminary master development plan as a prerequisite for approval. Required modifications may be more restrictive than district and/or supplementary regulations and may include, but not be limited to, project phasing, provision for additional bufferyards, open space, landscaping and screening, installation of erosion control measures, improvement to access and circulation systems, rearrangement of structures or uses within the site, ~~and~~ location and character of signs, architectural design of the proposed development, and other modifications deemed necessary to ensure compatibility with the surrounding environment and to protect public health, safety, and welfare.

See for FMDP ?

C. Revisions to a Preliminary Master Development Plan Approval: The Planning Commission may approve an application for modification of a previously-approved preliminary master development plan approval if it is determined that the revisions do not affect the findings relating to the criteria outlined in 12.02.050, leading to the original approval.

D. New Applications Following Denial or Revocation: No application for approval of the same or substantially the same site may be filed within one (1) year of the date of denial of a preliminary master development plan review by the [redacted]. The Owner may petition the [redacted] to grant a new review of the site if undue hardship or new facts concerning the site and/or application can be demonstrated.

E. Approval to Run with the Land: A preliminary master development plan approval pursuant to these provisions shall run with the land and shall continue to be valid upon change of ownership of the site or structure that was the subject of the application.

in consistent w/ Sec. 12.02.040 A. - 2 year expiration date. 13.12-8

F. Preliminary Master Development Plan – Granting of Exceptions to Bulk Regulations and Waiver of Board of Zoning Appeal Approval of Conditional Use Permits

1. **Granting of Exceptions to Bulk Regulations:** An applicant requesting approval of a Preliminary Master Development Plan or Final Master Development Plan may request exceptions from the zoning district bulk regulations governing

development area per dwelling unit, site area per unit, yards, minimum building setback, minimum lot size, minimum lot width, and maximum building height as may be necessary or desirable to achieve the objectives of the proposed planned development. Exceptions may be granted in accordance with the following provisions in order to achieve a more desirable site development than would result if the requirements of this ordinance were strictly adhered to:

a. **Request for Granting of Exceptions:** Exceptions must be specifically requested in writing on the Planning Commission Application Form submitted for a planned development and must also be clearly noted on the Preliminary Master Development Plan and Final Master Development.

b. **Granting of Exceptions – Preliminary Master Development Plan:** Exceptions to the zoning district bulk regulations governing development area per dwelling unit, site area per unit, yards, minimum building setback, minimum lot size, minimum lot width, and maximum building height may be granted as part of the approval of a Preliminary Master Development Plan and shall be based upon the recommendation of the Planning Commission, and determination by the ~~Board of Mayor and Alderman~~, that the exceptions will not be detrimental to the public safety, health, or welfare, or injurious to other property or improvements in the neighborhood in which the property is located. In approving exceptions, the ~~Board of Mayor and Alderman~~ may impose conditions which will secure substantially the objectives, standards, and requirements of this Ordinance. FINDING

Exceptions to the development area per dwelling unit or site area per unit requirement may be granted in order to permit greater development flexibility and ~~in order to permit the~~ increased density or number of units permitted on individual zone lots when approved by the ~~Board of Mayor and Alderman~~ as a part of the approval of an overall Preliminary Master Development Plan. However, exceptions to bulk regulations for development area per dwelling unit or site area per unit shall not result in an increase in the total number of dwelling units or density permitted by district regulations for the overall development approved as part of a Preliminary Master Development Plan. FINDING

Variance/Exception Process

move to pg. 12-8

c. **Granting of Exceptions – Final Master Development Plan:** The Planning Commission may grant exceptions to the zoning district bulk regulations governing yards, minimum building setback, minimum lot size, minimum lot width, and maximum building height ~~may be granted~~ as part of their approval of a Final Master Development Plan as may be necessary or desirable to achieve the objectives of the overall planned development. Exceptions may be granted in order to achieve a more desirable site development than would result if the requirements of this ordinance were strictly adhered to. In granting exceptions, the Planning Commission shall determine that the exceptions will not be detrimental to the public safety, health, or welfare, or injurious to other property or improvements in the neighborhood in which the FINDING

even though such exceptions may not have been reviewed and approved with the PMDP.

property is located. The Planning Commission may impose conditions which will secure substantially the objectives, standards, and requirements of this Ordinance.

preliminary or final master plan

2. **Waiver of Board of Zoning Appeals Approval of Conditional Use Permits:** No action of the Board of Zoning Appeals shall be required in the approval of a ~~planned~~ development including those activities or uses which would otherwise require conditional use permits as provided by other provisions of this Ordinance. Activities or Uses designated as a Conditional Use ~~shall~~ may be approved by the Planning Commission in accordance with any Special Conditions specified by other provisions of this Ordinance.

in the PMDP or FMDP

12.02.030 Final Approval by the Planning Commission of a Final Master Development Plan

The [redacted]'s approval of a preliminary master development plan establishing a defined zoning district shall authorize and form the basis for the Planning Commission's final approval of said development. The final approval of the Planning Commission of the development shall be subject to the following procedures and requirements:

A. Pre-application Conference: Prior to the filing of the application for a final master development plan, the applicant shall confer with the City Planning and Engineering staff to determine whether the applicant is proceeding according to the conditions of approval of the preliminary master development plan, to consider the desirability or necessity of amending the application or previously approved preliminary master development plan, to clarify the issues to be addressed with the application, and to discuss any other issue that may aid in the disposition of the project.

B. Application for Final Master Development Plan Approval: After the approval of a preliminary master development plan, the landowner may make application to the Planning Commission for final approval of the development or portion thereof provided that the proposed final master development plan is in substantial conformance with the substance of the preliminary approval by the [redacted]. Prior to submission of the final master development plan application, the final master development plan shall include all information contained in the preliminary master development plan receiving approval plus the following information:

1. Property boundary lines and dimensions, topography (5' contour intervals), location map.
2. Arrangement and size of buildings and the specific use of the property.
3. Information pertaining required bulk regulations as required in Section 08.04.040. A including the size of the site, lot area, floor area ratio, lot width, building height(s), building setback lines, front yards, side yards and rear yards.
4. Areas to be developed for parking, unloading, drives, walkways, recreation, or other uses designed in accordance with Articles 11.00 and 13.00.

? PGC site development regulations

5. Detailed landscape plans including the location of major existing growth that is to be retained. The landscape plan shall include specific information pertaining to bufferyards, open space, and required landscaped areas as required by the preliminary master development plan and various sections of this ordinance.
6. Detailed locations and types of utilities and easements including storm drainage as well as specific details of all surfaced areas. w/ drainage calculations.
7. Traffic study including estimates of traffic volumes and movements to and from the completed project from the boundary streets, and recommended improvements as required by the City Engineer in accordance with Section 13.06.
8. Details of the proposed traffic control and access management plan as required by Section 13.06. Plans shall also include details for street improvements, and grading and earth moving plans showing existing and proposed topography at 2-foot contour intervals.
9. Detailed architectural plans and elevations sufficient to indicate building, height, bulk, materials, and architectural design as required by Article 13.00, or if required by the City Planner.
10. Detailed sign~~age~~ plans and elevations sufficient to indicate the design of proposed sign~~age~~, height, materials and overall amount of sign~~age~~.
11. Time schedule for completion of the project.
12. A statement regarding the proposed method of operating and maintaining the project. & Statement of Financial Responsibility
13. A statement of adequate surety, in the form specified in Section 15.03.080, to ensure construction of the planned development within the proposed phasing/time schedule. (ORD. 0103-2A) 5-4-10
14. The final master development plan shall be sufficiently detailed to indicate fully the ultimate operation and appearance of the development. Also, the proposed final master development plan shall follow all applicable procedures and requirements governing the subdivision of land, and no building permit shall be issued for the project until a final plat, if necessary, of the proposed development, or portion thereof, is approved, filed, and recorded.

INSERT from pg. 12-6

C. Final Planning Commission Action: Upon receipt of an application for final approval of a final master development plan, the Planning Commission shall examine the final master development plan and determine whether it substantially conforms to all applicable criteria and standards, and whether it substantially conforms in all respects to the previously approved preliminary master development plan. The Planning Commission may impose such conditions of approval as are, in its judgment, necessary to ensure conformity to the applicable criteria and standards.

12.02.040 Lapse of Approval

A. Preliminary Master Development Plan – The approval of a Preliminary Master Development Plan shall become void two (2) years after the date of Planning Commission approval unless a Final Master Development Plan (previously referred to as a Final Site Development Plan) for the subject property, or portion

} increase to 4 yr. w/ Sec. 12.02.020 E.

thereof, has been approved by the Planning Commission in accordance with Section 12.02.030.

CA Memo
see 11/19/09 –
11/30/09

If a Final Master Development Plan has not been approved by the end of this two (2) year period, the owner may not apply for approval of a Final Master Development Plan until the owner requests the Planning Commission review the previously approved Preliminary Master Development Plan and provide the [redacted]n with a recommendation to either: (1) extend the approval of the Preliminary Master Development Plan of the subject property for a period not to exceed two (2) years; (2) revise the approval of the Preliminary Master Development Plan in regards to the use, bulk, and/or design standards required of the previous approval; or (3) cancel the approval and impose a new base zoning district on the subject project.

B. Final Master Development Plan – If within three (3) years after the date of Planning Commission approval work has not been performed, pursuant to a validly issued building permit, the approval of a Final Master Development Plan shall become void. For purposes of this section, grading or excavating activities shall not constitute work.

12.02.050 Procedures to Amend a Preliminary Master Development Plan or Final Master Development Plan

Major amendments to the master development plan must be submitted to the Planning Commission for review and recommendations and approved by the [redacted]. Major amendments shall include, but not be limited to:

A. An increase in the density of the development;

B. Substantial changes in circulation or access;

C. Substantial changes in the mix of dwelling unit types included in the project;

D. Substantial changes in grading or utility provision;

E. Substantial changes in the mixture of land uses;

F. Reduction in approved open space, landscaping, and bufferyards;

G. Substantial changes in architectural or site design features of the development; or

H. Any other change that the City Planner determines to be a major divergence from the approved preliminary master development plan. The Planning Commission may overrule this determination upon the favorable vote of a majority of the entire membership of the Planning Commission.

All other changes in the preliminary or final master development plan shall be considered revisions to the approved plan. The planning commission may approve these minor revisions.

Ordinance. Any zoning permit or use and occupancy permit issued in conflict with the provisions of this Ordinance shall be null and void.

15.03.020 Site Plan Required

The City Planner shall require that all applications for permits be accompanied by plans and specifications. With the exception of single family detached dwellings, all such applications shall include a plot or site plan showing the information as required below, which shall be approved by the Planning Commission prior to the issuance of the permit.

The following applications shall require plans and specifications to be submitted to and approved by the City Staff and may not require Planning Commission approval. The City Staff may require any additional information deemed necessary to determine compliance with City Ordinances.

A. Site improvements or building additions that:

1. Are 10% or less in scope or area and,
2. Do not exceed 5,000 square feet of building area and,
3. Do not exceed one such addition in any 12 month period.

B. Change in use of a building(s) or site(s) that:

1. Do not require building additions or site improvements and,
2. Are permitted uses in the zoning district in which the proposed changes are Located.

C. Residential Buildings or Other Residential Structures Involving Four Units or Less Located on a Single-Zone Lot

The plot plan of any residential buildings or other structures of residential activity with ten (10) dwelling units or less on a zone lot excepting single-family attached dwellings as described in Section 03.05 shall indicate:

1. The actual shape, location, and dimensions of the lot;
2. The shape, size, and location of all buildings or other structures to be erected, altered or moved, and of any building or other structure already on the lot;
3. The existing and intended use of the lot and of all such building or other structures upon it, including the number of dwelling units the building is intended to accommodate;

4. Such other information concerning the lot or adjoining lots as may be essential for determining whether the provisions of this Ordinance are being observed.

D. ~~All Other Buildings, Structures, and Activities~~

The site plan for all other buildings, structures, and activities shall include:

1. The ~~actual~~ shape, location, and dimensions of the lot; Legal desc.?
2. The shape, size, and location of all buildings or other structures to be erected, altered or moved, and of any building or other structure already on the lot;
3. The existing and intended use of the lot and of all such building or other structures upon it, including the number of dwelling units the building is intended to accommodate; if applicable;
4. Topographic features (contours not greater than 5 foot intervals); including natural drainage systems
5. Location of all proposed driveways and entrances as well as existing driveways and entrances on surrounding lots; sidewalks, trails/pathways
6. Location of all accessory off-street parking areas to include a plot plan showing design and layout of such parking facilities ~~where five or more accessory off-street parking spaces are to be provided~~; and including at least 50' on adjacent properties.
7. Location of all accessory off-street loading berths;
8. Location of open space;
9. Proposed ground coverage, floor area, and building heights; Sidewalks & bicycle facilities per Sec 13.09
10. Position of fences and walls;
11. Materials to be used on building facades and fences;
12. Position of screen planting (type of planting specified);
13. Location of windows and courts;
14. Location, type, and size of proposed signs; if applicable, (w/ materials & lighting to be used)
15. Proposed means of surface drainage, including drainage calculations and details of the proposed drainage facilities; OHE
16. Location of all easements and rights-of-way;
17. Certification of compliance with applicable performance standards; Utility lines and easements
18. Location of areas subject to flooding;
19. Percolation tests where subsoil sewage disposal is anticipated;
20. Show required yards, setbacks, and bufferyards;
21. Label zoning for property and surrounding properties; and owners and developments
22. Location, type, and size of proposed waste material collection facility, including bulk container, concrete pad, and opaque enclosure for other than City of Gallatin refuse containers. FOC, cable, electric, water, sewer, gas, telephone
23. Nine (9) copies of the site plan. Applicants preparing a site plan using Computer Aided Drafting and Design (CADD) shall be required to submit a digital file of the approved site plan. HVAC

15.03.021 Site Plan Voided

A site plan shall become null and void after a period of three (3) years if no construction activity has been initiated based on the approved site plan. Construction activity does not

include grading or excavation. For any site plan approved prior to May 1, 2008, expiration shall occur under the terms of the original site plan approval.

15.03.030 Use and Occupancy Permit Required

No building or addition thereto, constructed after the effective date of this Ordinance, and no addition to a previously existing building shall be occupied, and no land shall be used for any purpose, until a use and occupancy permit has been issued by the Office of the Zoning Administrator. No change in a use other than that of a permitted use shall be made until a use and occupancy permit has been issued by the Zoning Administrator. This shall not apply to single-family and two-family detached dwellings.

PLNG/CODES

by Bldg official.

15.03.040 Application for Use and Occupancy Permit

Every application for a zoning permit shall be deemed to be an application for a use and occupancy permit. Every application for a use and occupancy permit for a new use of land where no zoning permit is required shall be made directly to the Office of the Zoning Administrator.

15.03.050 *Deleted Ordinance No. O1103-19*

15.03.060 Records of Use and Occupancy Permits

Building Official

A record of all use and occupancy permits issued shall be kept on file in the Office of the Zoning Administrator, and copies shall be furnished upon request to any person having a proprietary or tenancy interest in the property involved.

15.03.070 Final Inspection

office of the Building official

No use and occupancy permit for a building, structure or an addition thereto, constructed after the effective date of this Ordinance, shall be issued until construction has been completed and the premises inspected and certified by the Office of the Zoning Administrator to be in conformity with the plans and specifications upon which the zoning permit was based and with the applicable performance standards established by Article 11.00 and Article 13.00.

15.03.080 Surety Required

structure and site/use shall

TCA 62-6-137 TCA 13-4-310

P.U.

Any application for a zoning permit or building permit which requires the submission of a site plan or Final Master Development Plan shall be accompanied by a surety in the amount of the estimated cost of site improvements including, but not limited to, water and sewer installation, parking lot and driveway paving, construction of border barriers, site grading, erosion control, screening and landscaping.

Sidewalks, lighting

Any private section of a development will also be required to submit a surety in the amount of the estimated cost of site improvements including, but not limited to, water