City of Gallatin
Building Department

Uncovered Decks & Porches

Building Guides for Homeowners

Did You Know?

- As "owner-builder" you are the responsible party of record on such a permit. If your work is being performed by a contractor, you may protect yourself from possible liability if the contractor applies for the proper permit in his or her name
- If you plan to do your own work, including all of the trade work then you may apply for the permit
- Frequent practices of unlicensed contractors is to secure an "owner-builder" building and trades permits, erroneously implying that the property owner is providing his or her own labor and material personally
- It would benefit you to hire a licensed contractor to perform the trade work
- Permits are valid for work to begin within six months

Why Do I need a Permit?

There are many important reasons to obtain building permits and to have inspections performed for your construction project.

Protects property values

Your home is typically your largest investment. If your construction project does not comply with the building codes, your investment could lose value. If others in your neighborhood make unsafe or substandard changes to their homes, it could lower the resale values for the entire community.

Saves Money

Homeowners insurance policies may not pay for damages caused by work done without permits and inspections.

Makes Selling Property Easier

Listing associations require owners to disclose any home improvements or repairs and if permits were obtained. Many financial institutions will not finance a purchase without proof of a final inspection. If you decide to sell a home or building that has had modifications without a permit, you may be required to tear down the addition, leave it unoccupied or do costly repairs.

Improves safety

Your permit allows the building department to inspect for potential hazards and unsafe construction. By ensuring your project meets the minimum building code standards of safety, the building department can reduce the risk of fire, structural collapse and other issues that might result in costly repairs, injuries and even death. Inspections complement the contractor's experience and act as a system of checks and balances resulting in a safer project.

It's the Law

Permits are required by Ordinance. Work without a permit may be subject to removal or other costly remedies.

The purpose of this guide is to assist you in the permitting process. This handout is intended to cover information for a basic plan submittal and typical project under the building codes. It is not intended to cover all circumstances. Depending on the scope and complexity of your project, additional information may be required. Discuss your project with city staff to determine if it is subject to additional requirements.

What do I need in order to apply for a building permit?

The following must be submitted:

☐	**Site Plan**	Page 2
☐	House Attachment	Page 3
☐	Guardrails	Page 4
☐	Footings	Page 4
☐	Cross-Section Deck Plan	Page 5
☐	**Permit Application**	

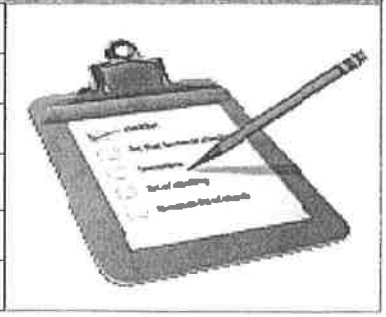

What is a Site Plan?

A site plan is a detailed drawing of your property, also known as a survey of your land. These are usually drawn by a land surveyor. The site plan will show the dimensions of your project and its relationship to existing setbacks, easements, utilities, other structures on the property, and distance to your property lines. If your project will require moving any utilities (gas, water, sewer/septic, electric, etc.), show where those meters will be relocated.

What is REQUIRED for a Permit?

☐ Provide copies of the SITE PLAN

Notes:

1. Structures must meet zoning requirements and may not be permitted to be built over setback lines, easements, or property lines
2. A survey from a registered land surveyor will be required if your project is located in a protected area
3. An as-built survey may be required if the structure is proposed within 12" of a required minimum setback
4. If you are on a septic tank, you will be required to have approval from the county health department prior to issuance of a permit
5. If you do not know the location of your utilities, contact the Utility Notification Center. Remember to ask them about the cost of this service.

Sample site plan
Not to Scale

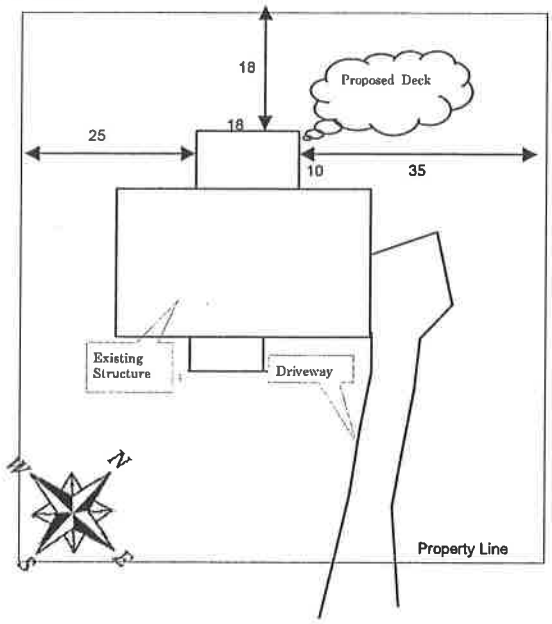

Construction Details

What is REQUIRED for a Permit?

☐ Provide copies of a DECK PLAN (cross- sectional drawing showing):
- footing dimensions
- column dimensions
- attachment details
- Spans of joists, beams, decking, footings and dimensions of all material

NOTES:

1. Unless noted otherwise, all lumber shall be grade #2 or better and shall be pressure treated ACQ or CA-B
2. All lumber in contact with the ground shall be rated as "ground contact"
3. All screws or nails shall be hot dipped galvanized or stainless steel, and nails shall be ring shanked or annular grooved
4. All connectors shall use nails for attachment
5. All hardware shall be galvanized with a G-185 coating or shall be stainless steel
6. Stairways shall be not less than 36" in width
7. Conditions which do not meet these details will require a plan submission
8. Decks shall be constructed in accordance with the International Residential Code

Tips on hiring contractors

- Hire only licensed contractors
- Get at least 3 bids
- Get 3 references, and ask to see a project
- Get it in writing - but before you sign the contract, make sure you completely understand
- Don't make final payment until you have a Certificate of Completion (CC) and you are satisfied
- Have the contractor apply for the required permits

Construction Details: Attaching to the House

Correctly attaching your new deck to your existing home is critical to preventing collapses. A common issue that can cause deck failures and loss of life are decks that pull away from homes because of missing or inadequate house attachments.

Cross-Section

Attach the deck rim joist to the existing house exterior wall as shown. The wall must be sheathed with a minimum 3/8" structural panel sheathing. Use non-corrosive lag screws or through-bolts when fastening to an existing band board or wall stud; use expansion anchors or epoxy anchors when fastening to concrete or masonry. Fasteners shall be 16" on center (o.c.) and staggered in 2 rows. Note: place spacers (washers) behind rim joist to prevent trapping water.

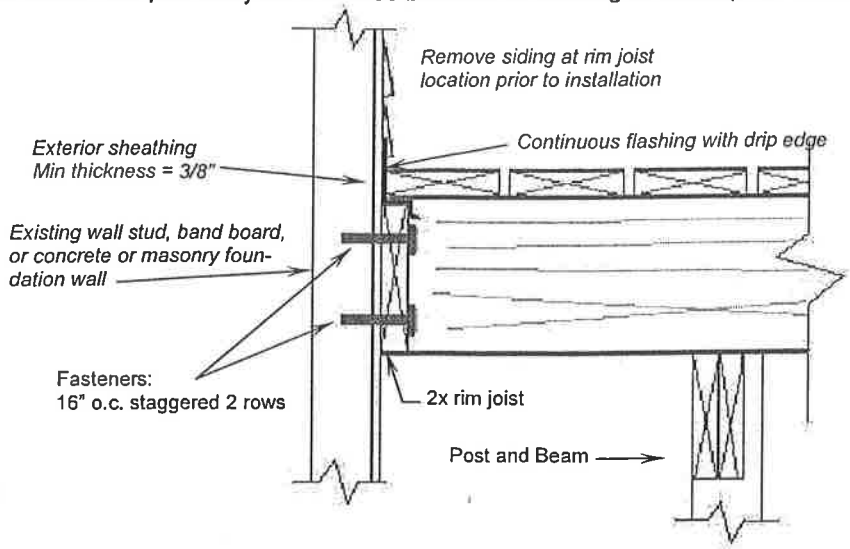

Sample attachment detail

Positive Connections: Fastener Spacing

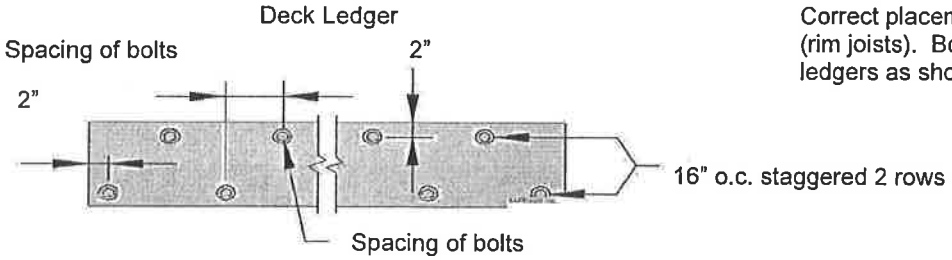

Correct placement of fasteners in deck ledgers (rim joists). Bolts must be placed in the deck ledgers as shown.

Notes:

1. The maximum gap between the face of the ledger board and face of the house band joist shall be 1/2-inch (13mm)
2. Ledgers shall be flashed to prevent water from contacting the house band joist
3. Bolts shall be staggered as depicted above
4. Conditions such as attachment to cantilevers or veneers will require engineer stamped approval at plan submittal

For residential applications using the following methods a total design load of 40 psf is required:

- Conventional framing
- Wood I-joist with rim board may require registered design professional.
- The deck ledger connection to floor truss system shall be designed & approved by the truss manufacturer's design professional.

REMINDER:

Permits are only issued after plan review. The time required to conduct this review will depend on the completeness of the information received in the plans.

Construction Details: Guardrails • Stairs • Handrail

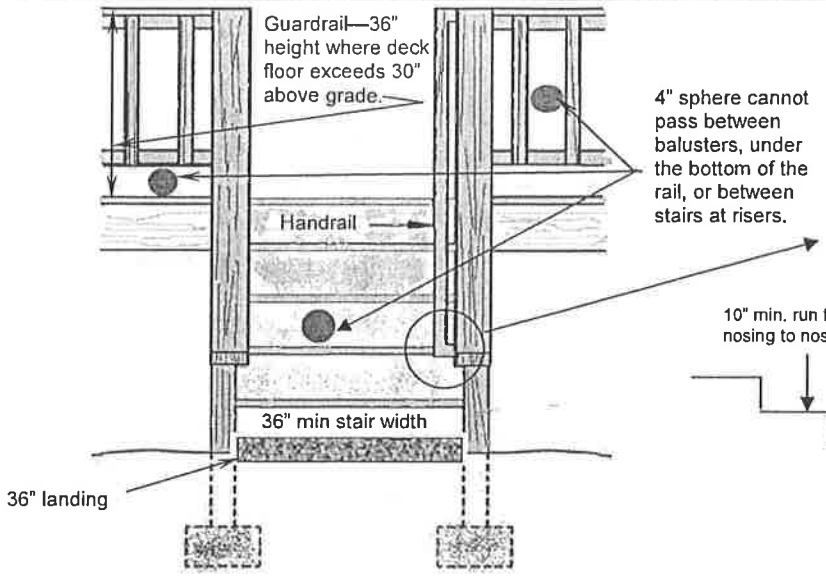

All decks 30" high or more above finished grade, are required to have a guardrail.

Handrails are required on one side of the stairs with 4 or more risers 34" to 38" above stair nosing.

Handrail ends shall be returned or end in newel posts.

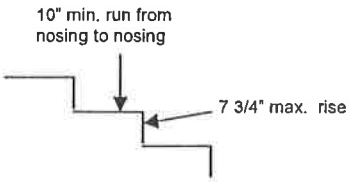

Handrail cross-section

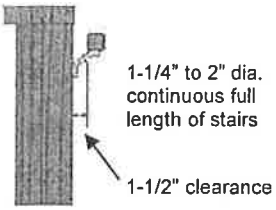

Construction Details: Footing Requirements

The building code lists several requirements for footings based on use of the deck (loads) and soil conditions. At a minimum, footings shall be at least down to the frost depth for your location. Check with the building department for specific depths required. Additionally, the deck posts must be attached to the footing according to code to prevent lateral movement and uplift (wind and cantilevered forces). Deck posts must also be either a natural decay-resistant or preservative-treated wood and supported by a metal pedestal projecting 1" above the concrete and 6" above exposed earth to prevent moisture rot.

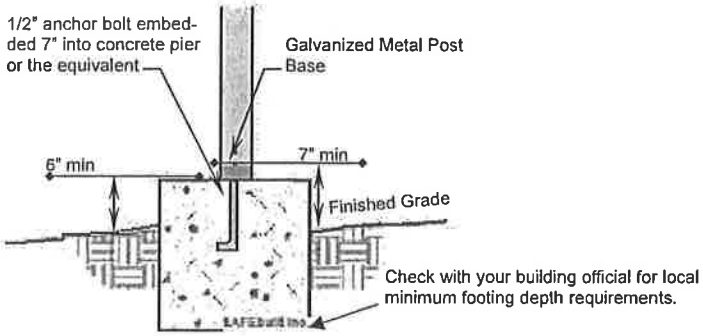

Sample footing detail

Additional Information

What will the building inspector look at?

A typical deck project will require the following inspections:

1. *Footings:* Foundation inspections shall be made after trenches are excavated, reinforcement steel is in place, forms erected, and PRIOR to placing of concrete
2. *Framing Inspection*: Inspection of the rim board attachment, floor joist, beams and hangers prior to finished flooring being applied.
3. *Final:* Inspection made AFTER the deck is completed

Want to know more? Need more help?

We hope you found the information in this guide useful. If you have any questions, please feel free to contact us.

How do I schedule a required inspection?

Please **call the inspection line listed on your permit card** and leave all information requested in the message.

Construction Details: Cross Section of Deck Plan

Directions:

Fill in ALL blanks on this page with the dimensions and materials which will be used to build the structure. Please print legibly.

Type of wood _____
Ex. Doug/Fir/Larch #2

Type of beam/post connection (see examples below):

A ☐

B ☐

C ☐

Size and amount of lags or bolts

_____

Ex. 2-3/8" x 4 1/2" lags @ 16 o.c.

1 x ____ or 2 x ____ decking

Ex. 1 x 4 or 2 x 6 decking

2x ___ Rim Joist

Ex. 2 x 10

2 x ___ Joists / Spaced ____ apart

Ex. 2x10 spaced 24" apart

___) ____ x _____ Beam

Ex. 2) 2x10

Span _____

(Example 12')

Height from grade to bottom of beams _____

Ex. 48"

See Height notes

___ x ___ posts

Spaced ____ apart

(ex. 4x4 posts spaced 8' apart)

Height Notes:

1) If an exit or egress from an existing building passes under the proposed deck or if there is a patio under the deck a minimum 6'8" headroom must be maintained under the beam. Please indicate any openings in existing wall under the deck

2) Minimum 36" height above a basement egress window

Finished Grade

Check with your building official for local minimum footing depth requirements

Beam/Post Connections

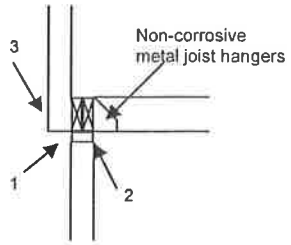

Type A

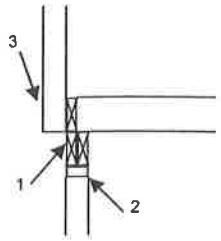

Type B

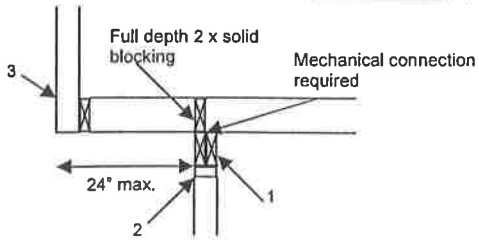

Type C

1) Beam splices to occur over posts with 1 1/2" bearing

2) Non-corrosive metal post/beam connector

3) Lag or carriage bolt railing to beam